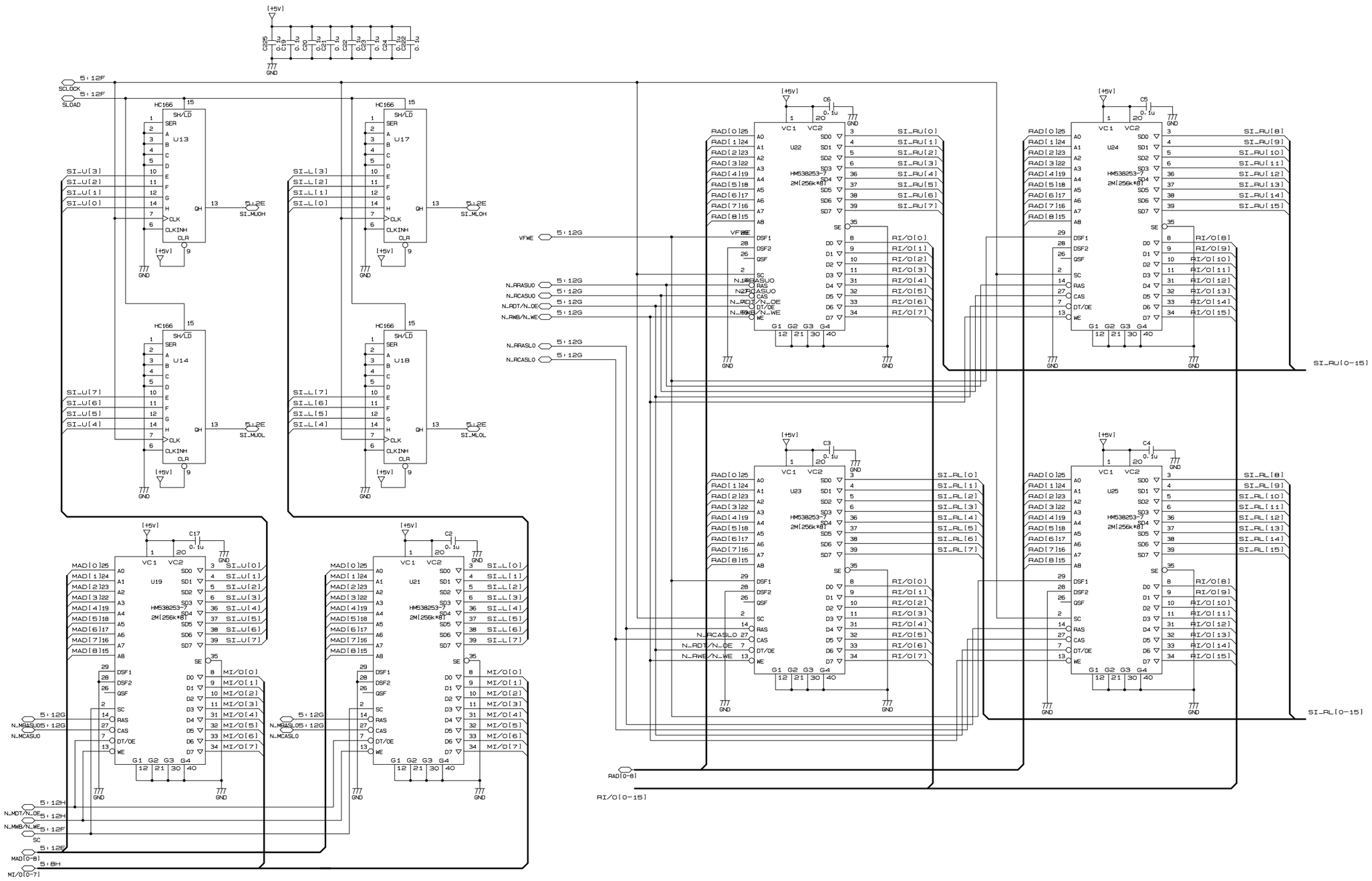

MOD	CONTENTS	DATE	REVISED	CHECKED	APPROVED

APPROVED	CHECKED	DRAWN	DESIGNED	MODEL	TITLE
				RF720A/MRD-96	MAIN PCB (E43-700A)
				KODEN KODEN ELECTRONICS CO.LTD.	DWG. NO. E43CGB700A.002

PAGE