1996.12.05改定

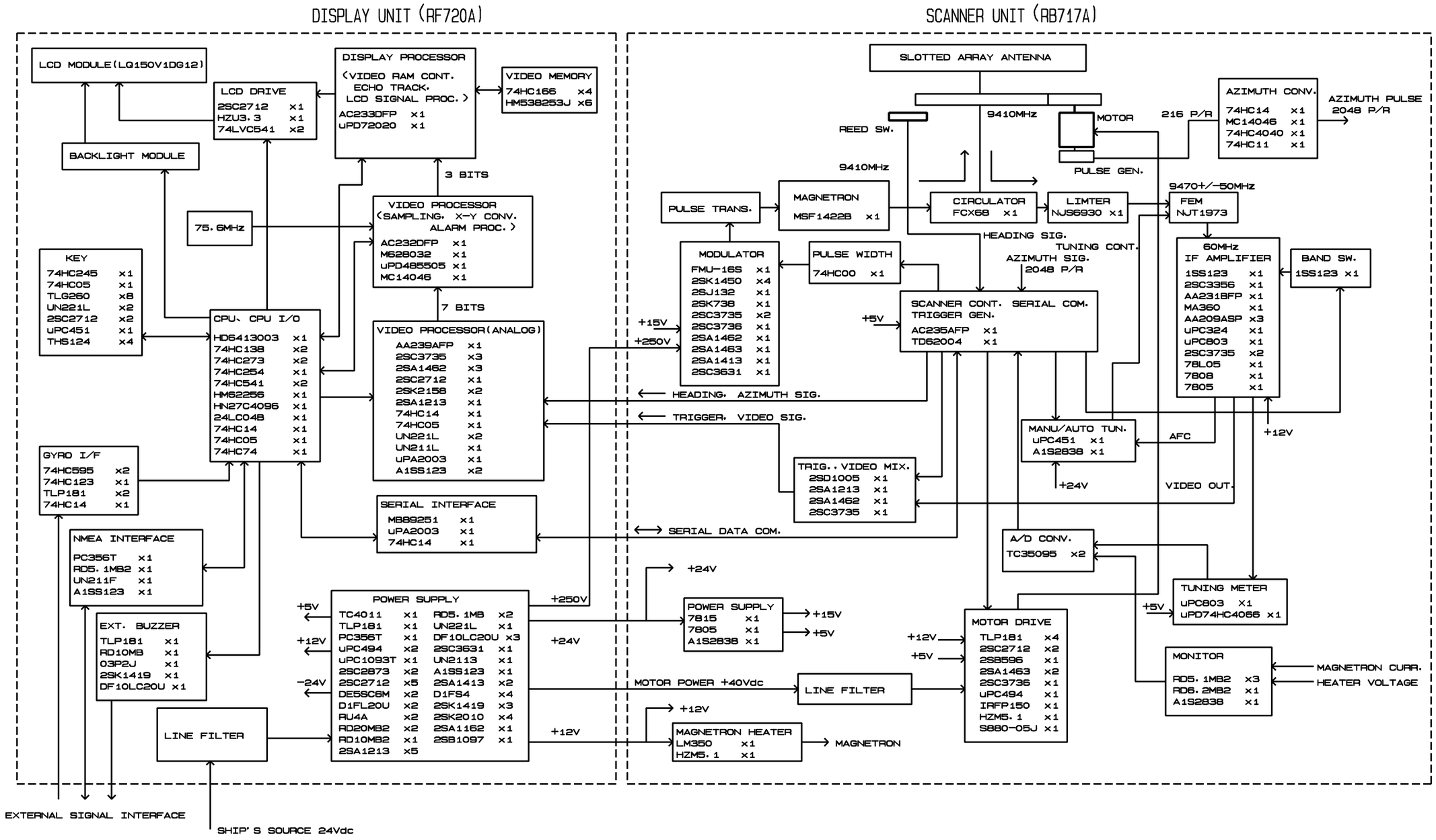

MOD	CONTENTS	DATE	REVISED	CHECKED	APPROVED

APPROVED	CHECKED	DRAWN	DESIGNED	MODEL	TITLE
				RA53	SYSTEM BLOCK DIAGRAM
				KODEN ELECTRONICS CO.LTD.	DWG. NO. E43CFB0030 / PAGE 1/1