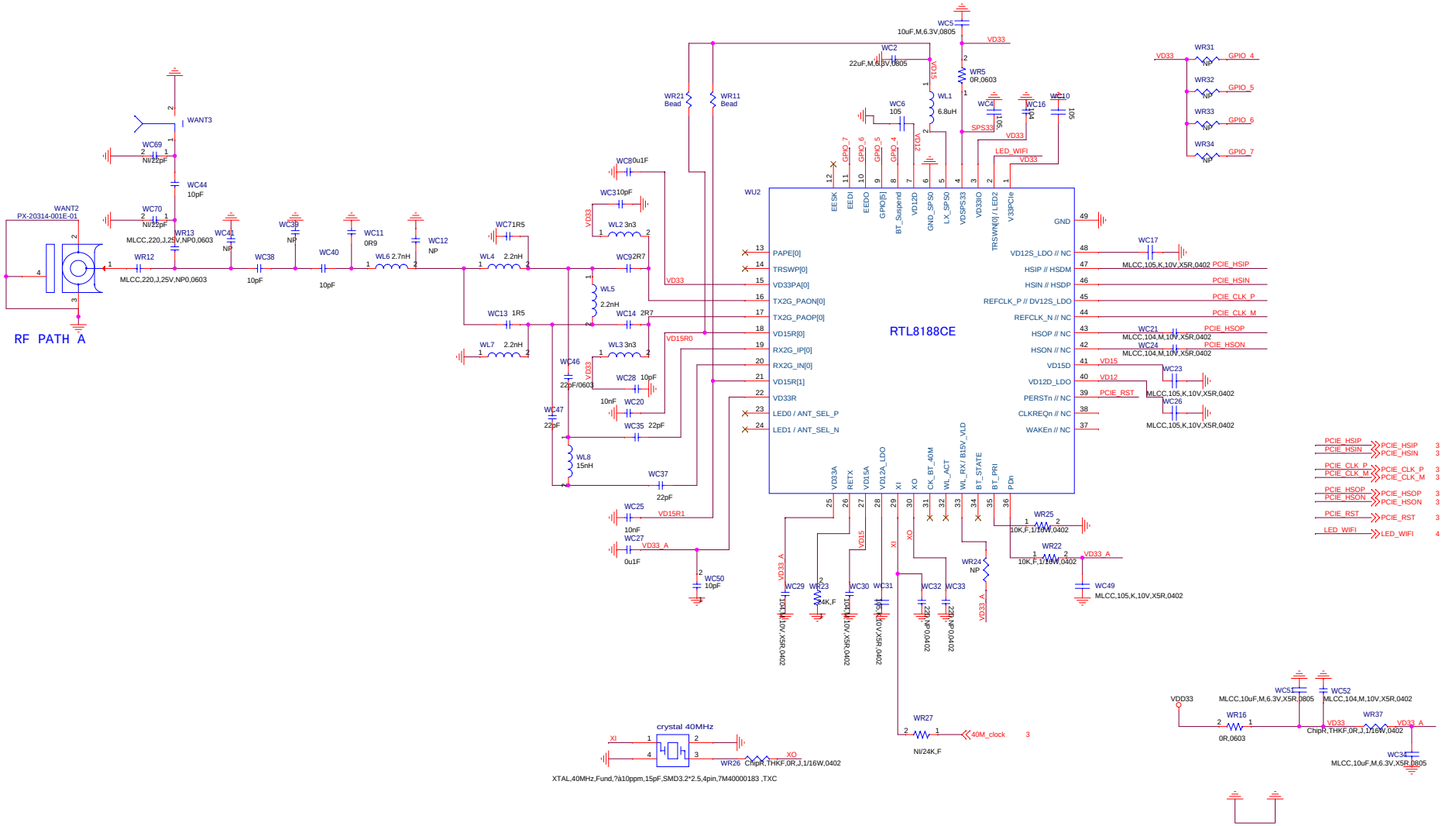

T&W ELECTRONICS	Gan9.8T92A-6			
	T&W PAGE			
Size C	Document Number	Design By: sen	Review By: <Reviewer>	Rev 0.1
Date: Friday, November 09, 2012		Sheet 11 of 11		