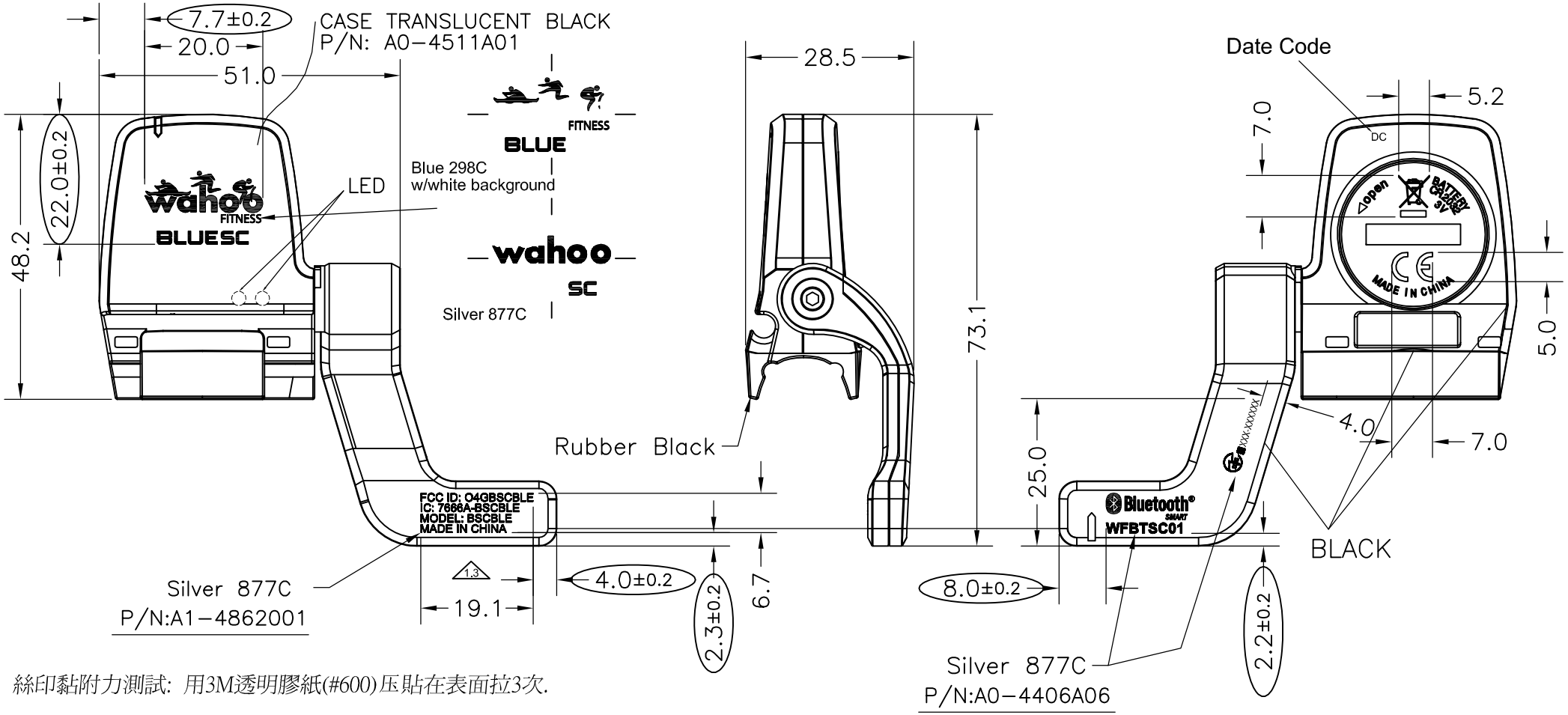

絲印黏附力測試: 用3M透明膠紙(#600)压貼在表面拉3次.

DO NOT SCALE DRAWING

DAYTON INDUSTRIAL CO. LTD. KENDY ENTERPRISE LTD.			3rd angle projection		LINEAR ± ANGULAR ± UNSPECIFIED TOLERANCE
TITLE: COSMETIC DRAWING			MODEL NAME: Wahoo Combo TX.		VERSION NO: 1.0
PART NO: B9-WA4540001			MODEL NO: WA45400		DATE: 23/8/2012
MAT'L: ABS	SCALE: 1:1		DOC CONTROL NO: 004-7796		SHEET 1 of 1
FINISH:	QTY:		DWN	CHKD	APPD

REV.	REVISIONS	DATE