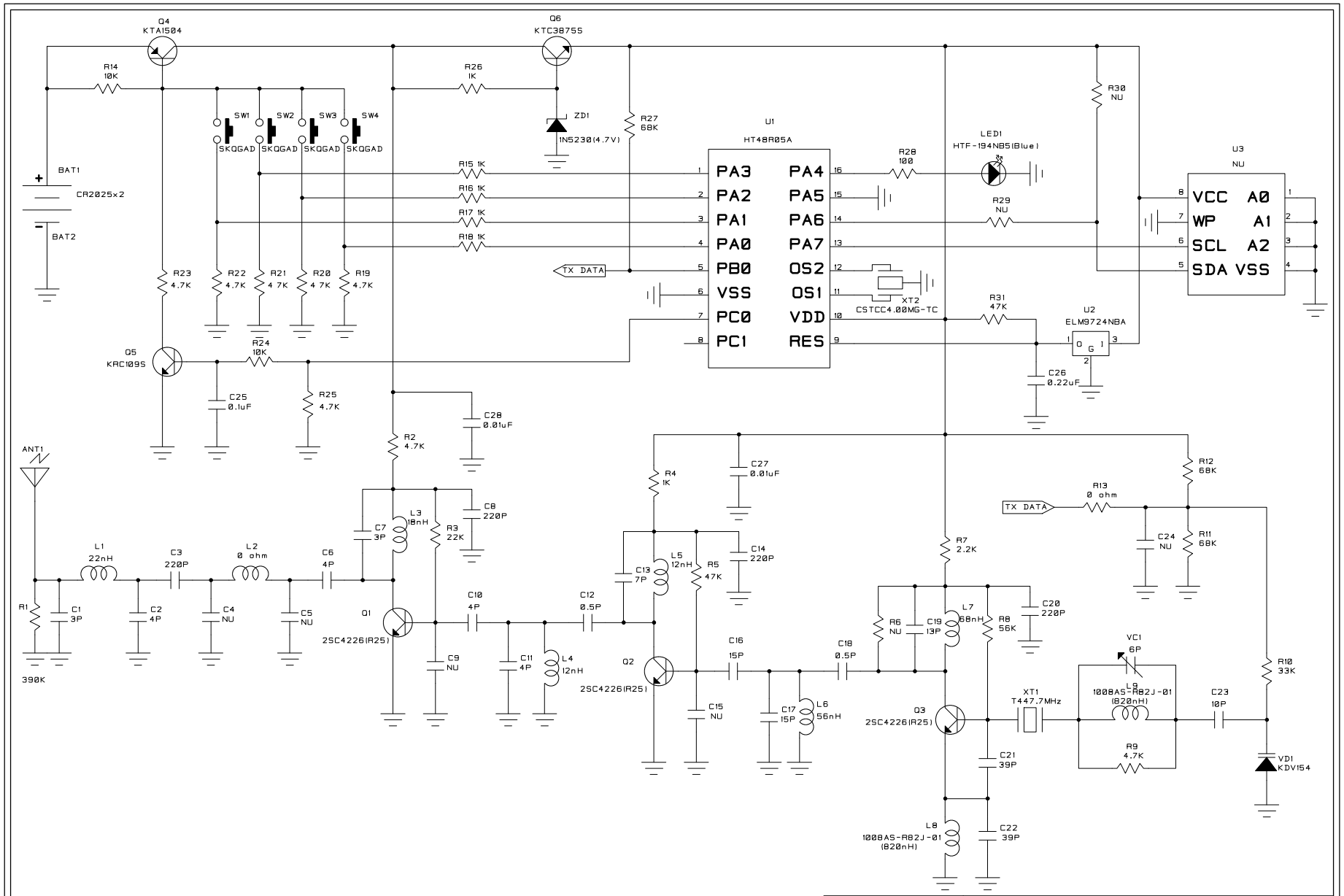

DATE 04.08.16		COMPANY NAME YOUNGSHIN ELECTRONICS CO.,LTD.	
APPROVAL		MODEL 044JR1700F447	
CHECK		DWG NO. HW-SCH-EX-R1700-(Rev00)	REV. 00
DRAWN		FILE NAME	SHEET 1 of 1