O44J1WAMLEDANT Block Diagram

RX : B1~B4 (RF receiving block)
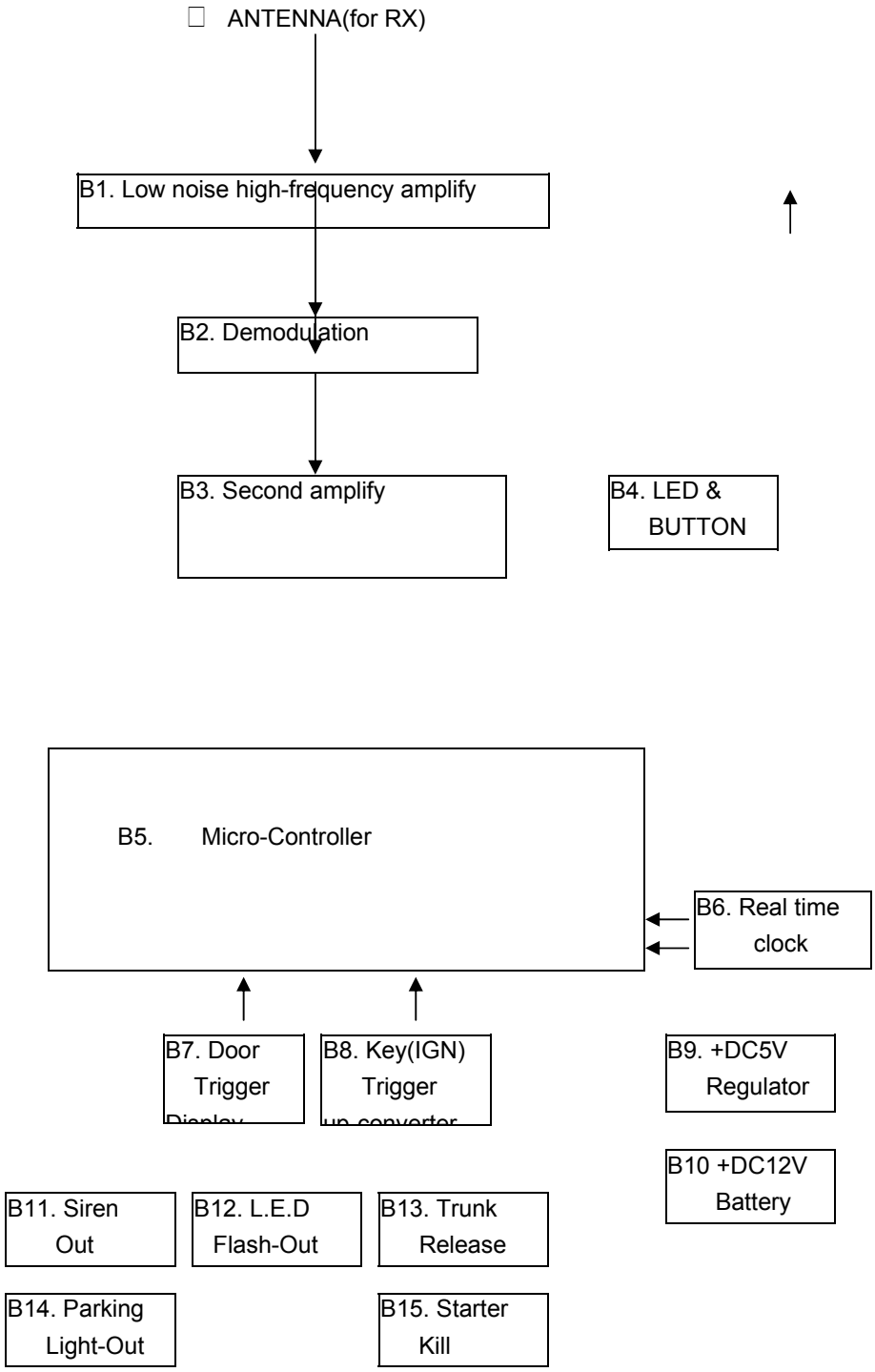
Logic : B5~B15