REVISION RECORD			
REV	Change description	APPROVED:	DATE:
01	Original		Dec.29,04
02	Change R3 from 510k to 1M ohm		Sep 12,05

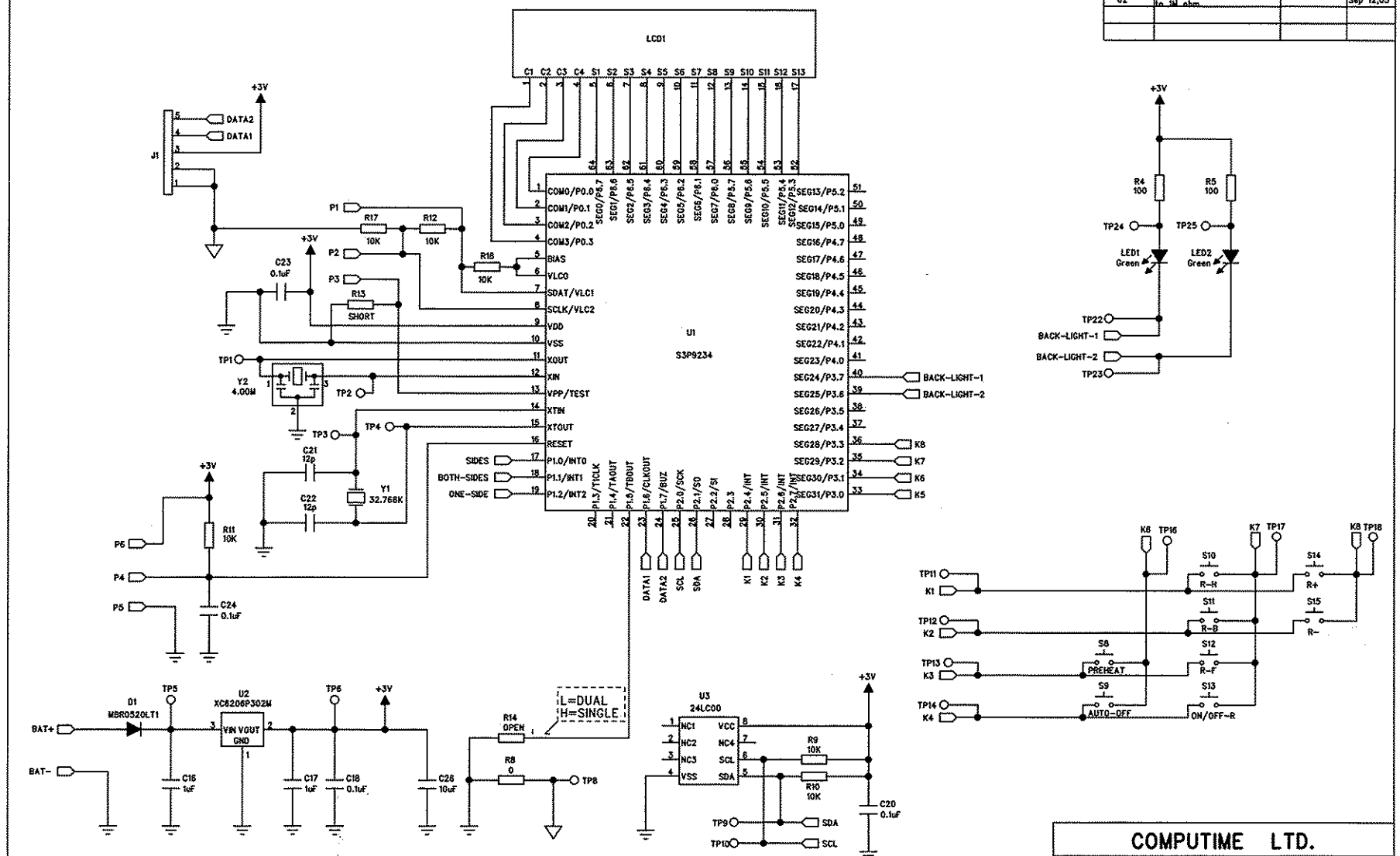

COMPUTIME LTD.				
DRAWN:ZJ SONG	DATE: Sep 12,05	SUN005A(REMOTE)		
CHK:	DATE:			
APP:	DATE:	A3	LOGIC PART	REV:02
RELEASE:	DATE:	SCALE:NONE	SHEET:3 OF 4	

REVISION RECORD			
REV	Change description	APPROVED:	DATE:
01	Original		Dec.29,04
02	Change R3 from 510k to 1M ohm		Sep 12,05
03	Change R3 from 1M to 510k		
04	Remove C19		April 25,06

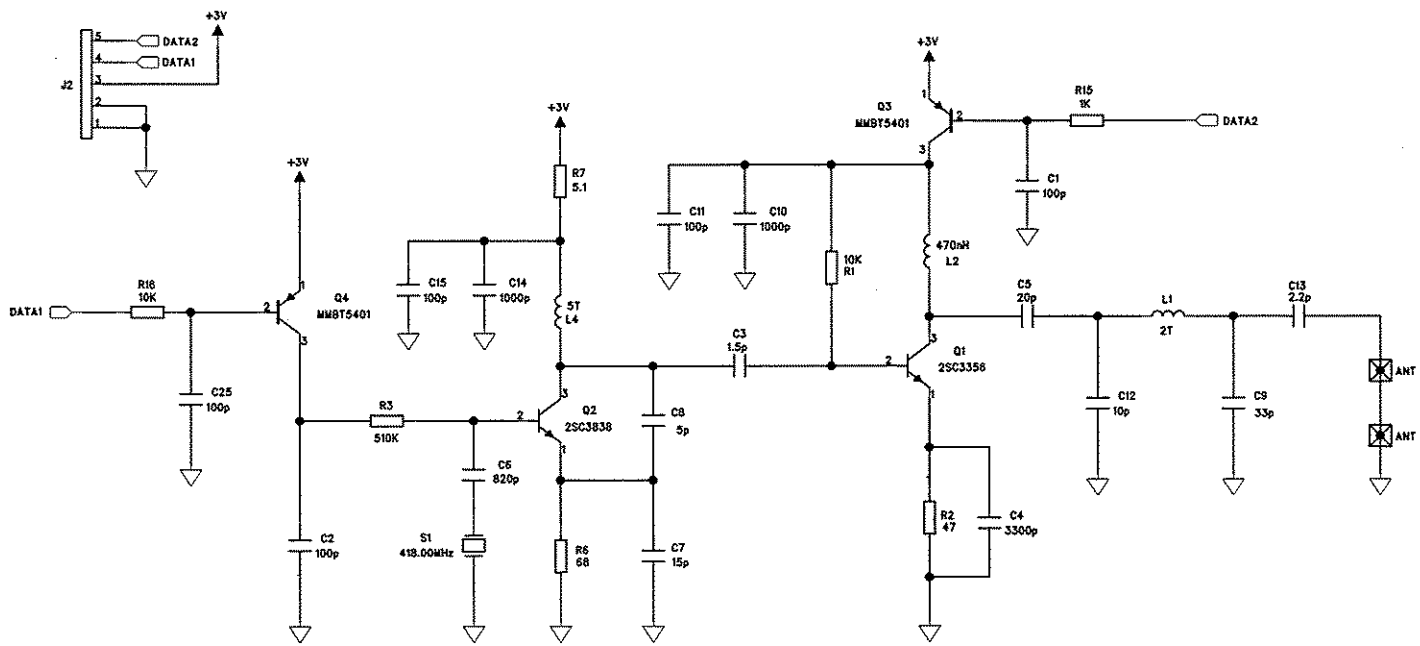

COMPUTIME LTD.				
DRAWN:ZJ SONG	DATE:Feb 10,06	SUN005A(REMOTE-TX)		
CHK:	DATE:			
APP:	DATE:	A3	RF PART	REV:03
RELEASE:	DATE:	SCALE:NONE	SHEET:4 OF 4	