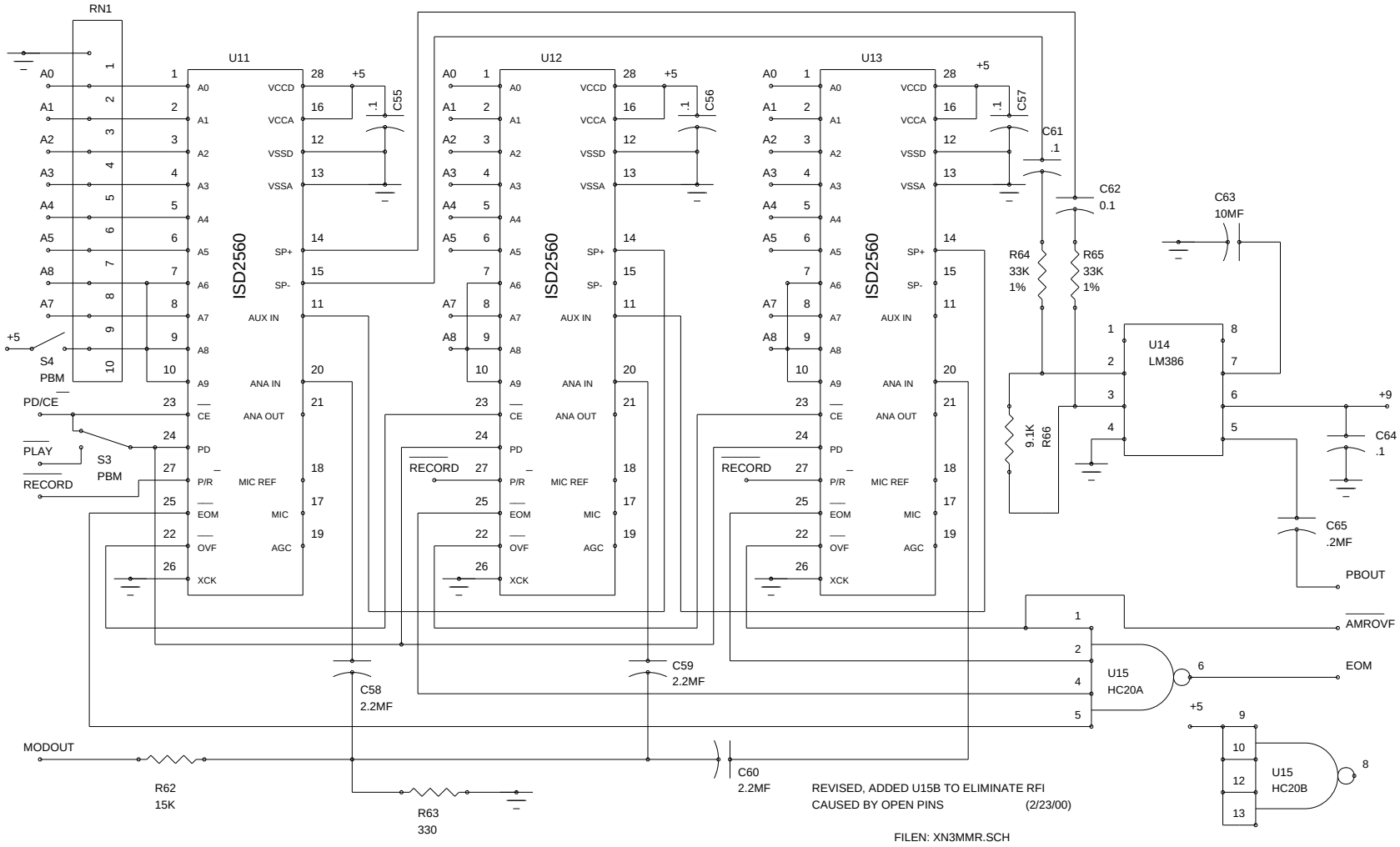

NOTES: REVISED 1-12-99 REC/PB gain

LAST C65, (J2), (L3), R66, U15, RN1, (CR5)

SLATER DESIGNS

2689 S PRAIRIE DUNES DR - LAS VEGAS NV 89122

(702) 641-9334

TITLE	XNET 3 MINUTE AUDIO MESSAGE REPEATER
CLIENT:	MICROCAST INC.
SIZE	A
CODE	
DESIGN BY: WAYNE SLATER	
BBD:	3/11/98
FINAL APPROVAL	:
REV	
DATE	3/12/97
SHEET	4 OF 5