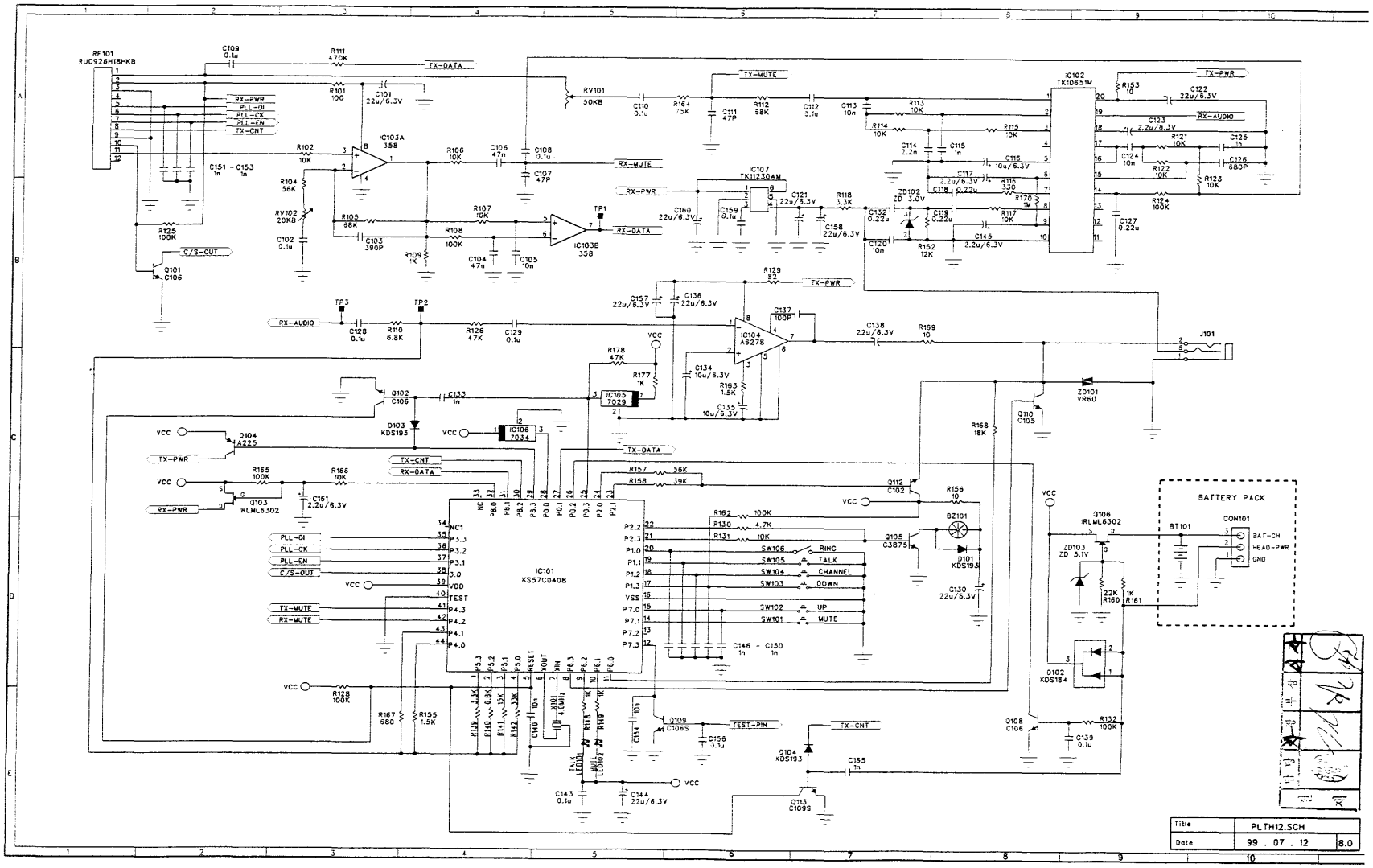
RF101
RU0926H18HKB
IC101
KS57C0408
IC102
TK10651M
IC103A
358
IC103B
358
IC104
A6278
IC105
7029
IC106
7034
IC107
TK11230AM
J101
BATTERY PACK
BT101
CON101
BAT-CH
HEAD-PWR
GND
TX-DATA
RX-PWR
PLL-DI
PLL-CK
PLL-EN
TX-CNT
RX-DATA
TX-MUTE
RX-MUTE
C/S-OUT
RX-AUDIO
TX-PWR
TEST-PIN
VCC
RING
TALK
CHANNEL
DOWN
UP
MUTE
Title
PLTH12.SCH
Date
99 . 07 . 12
8.0