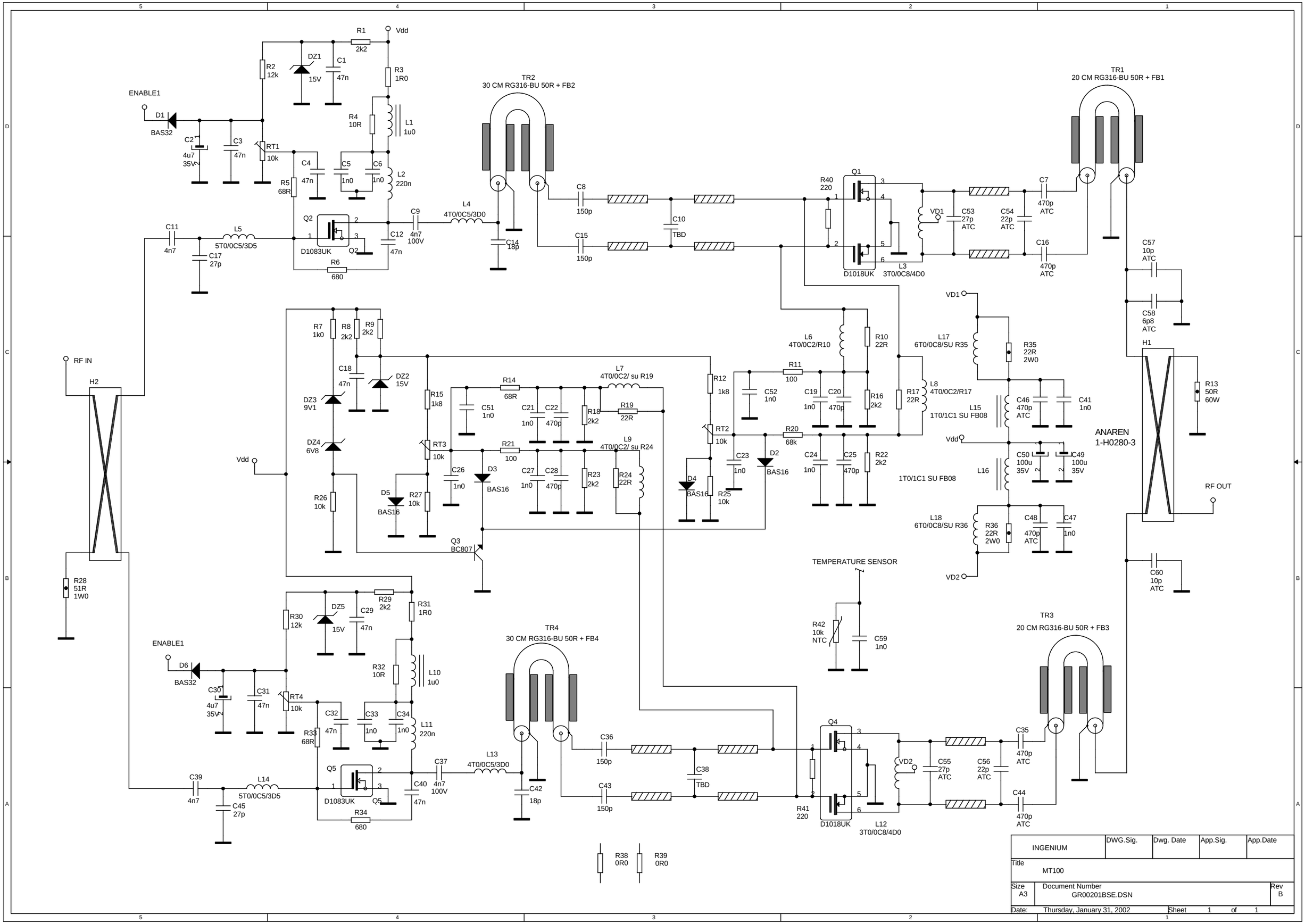
Vdd
R1 2k2
R2 12k
DZ1 15V
C1 47n
R3 1R0
ENABLE1
D1 BAS32
C2 4u7 35V
C3 47n
RT1 10k
R4 10R
L1 1u0
C4 47n
C5 1n0
C6 1n0
L2 220n
R5 68R
Q2 D1083UK
C9 4n7 100V
L4 4T0/0C5/3D0
C11 4n7
L5 5T0/0C5/3D5
C17 27p
C12 47n
R6 680
TR2 30 CM RG316-BU 50R + FB2
C14 18p
C8 150p
C15 150p
C10 TBD
R40 220
Q1 D1018UK
L3 3T0/0C8/4D0
VD1
C53 27p ATC
C54 22p ATC
C7 470p ATC
C16 470p ATC
TR1 20 CM RG316-BU 50R + FB1
C57 10p ATC
C58 6p8 ATC
H1
ANAREN 1-H0280-3
RF OUT
R13 50R 60W
C60 10p ATC
RF IN
H2
R28 51R 1W0
R7 1k0
R8 2k2
R9 2k2
C18 47n
DZ2 15V
DZ3 9V1
DZ4 6V8
R26 10k
R15 1k8
RT3 10k
D5 BAS16
R27 10k
Q3 BC807
R14 68R
C51 1n0
C21 1n0
C22 470p
R18 2k2
L7 4T0/0C2/ su R19
R19 22R
R21 100
C26 1n0
D3 BAS16
C27 1n0
C28 470p
R23 2k2
L9 4T0/0C2/ su R24
R24 22R
R12 1k8
RT2 10k
D4 BAS16
R25 10k
C23 1n0
D2 BAS16
R20 68k
R11 100
C52 1n0
C19 1n0
C20 470p
L6 4T0/0C2/R10
R10 22R
R16 2k2
C24 1n0
C25 470p
R22 2k2
R17 22R
L8 4T0/0C2/R17
L15 1T0/1C1 SU FB08
L17 6T0/0C8/SU R35
R35 22R 2W0
C46 470p ATC
C41 1n0
C50 100u 35V
C49 100u 35V
L16 1T0/1C1 SU FB08
L18 6T0/0C8/SU R36
R36 22R 2W0
C48 470p ATC
C47 1n0
VD2
TEMPERATURE SENSOR
R42 10k NTC
C59 1n0
R29 2k2
R30 12k
DZ5 15V
C29 47n
R31 1R0
ENABLE1
D6 BAS32
C30 4u7 35V
C31 47n
RT4 10k
R32 10R
L10 1u0
C32 47n
C33 1n0
C34 1n0
L11 220n
R33 68R
Q5 D1083UK
C37 4n7 100V
L13 4T0/0C5/3D0
C39 4n7
L14 5T0/0C5/3D5
C45 27p
C40 47n
R34 680
TR4 30 CM RG316-BU 50R + FB4
C42 18p
C36 150p
C43 150p
C38 TBD
R41 220
Q4 D1018UK
L12 3T0/0C8/4D0
TR3 20 CM RG316-BU 50R + FB3
C35 470p ATC
C44 470p ATC
C55 27p ATC
C56 22p ATC
R38 0R0
R39 0R0
INGENIUM
DWG.Sig.
Dwg. Date
App.Sig.
App.Date
Title
MT100
Size A3
Document Number GR00201BSE.DSN
Rev B
Date: Thursday, January 31, 2002
Sheet 1 of 1