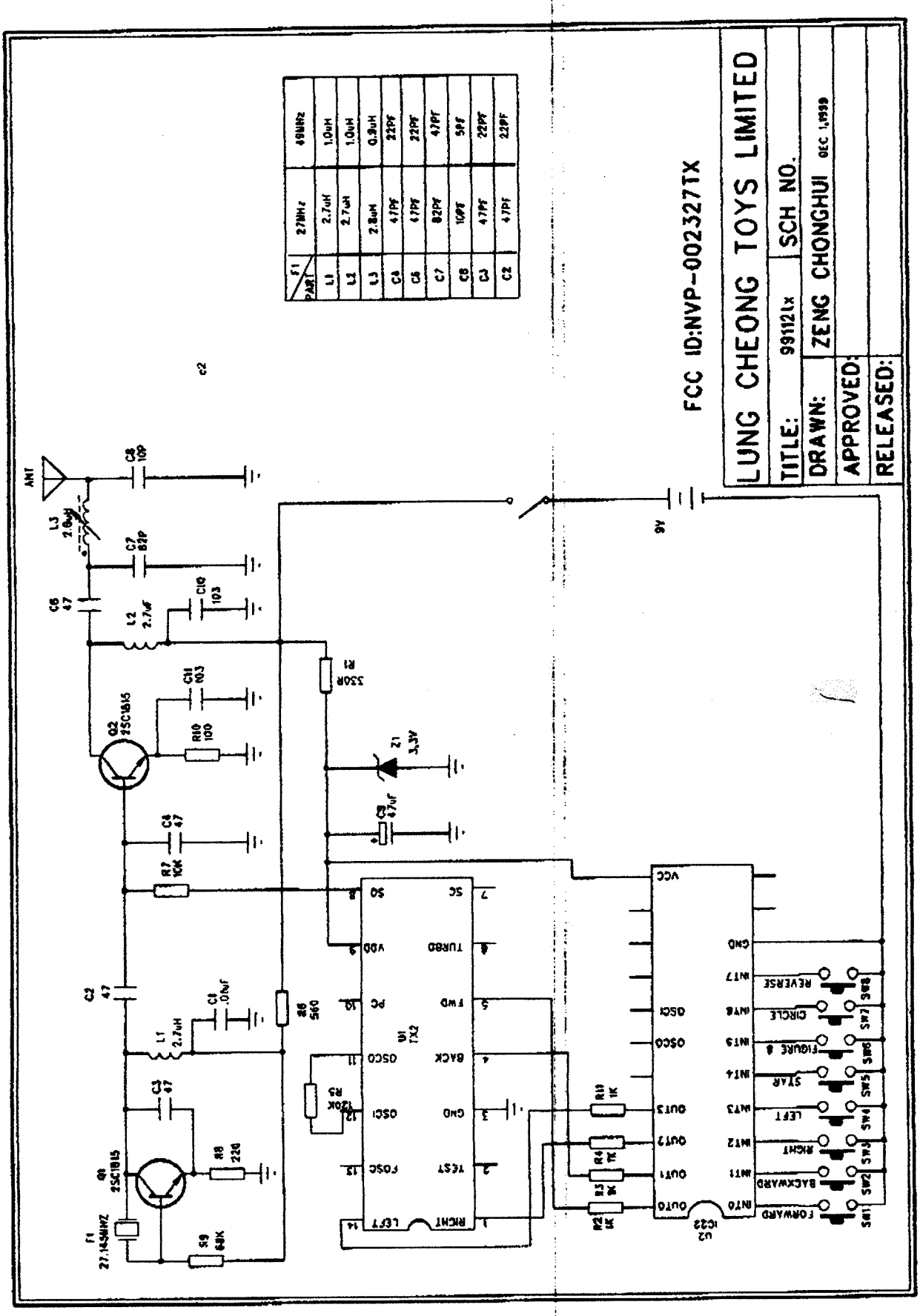.99112tx.sch-1 - Wed Dec 1 15:10:19 1999