Install jumper R16 for initial prototypes using STANDARD Powertip display. Install jumper R15 for production units using CUSTOM Powertip display. DO NOT install both jumpers! See charge pump note below if R15 is installed.

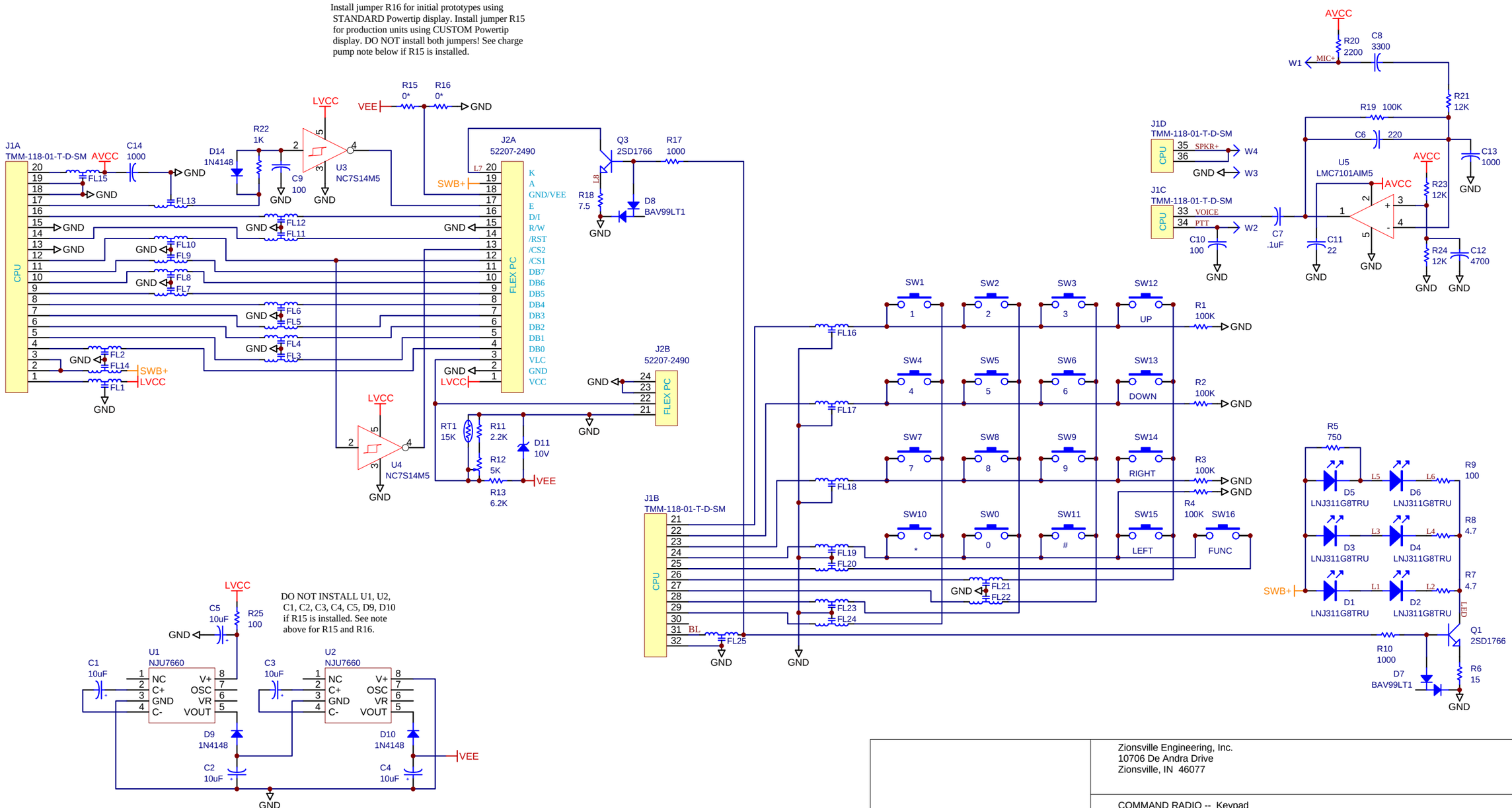

Zionsville Engineering, Inc.
10706 De Andra Drive
Zionsville, IN 46077

COMMAND RADIO -- Keypad

9/21/99, rad

Size	FCSM No.	DWG No.	Rev
B		121E206	4

Scale

Sheet 1 of 1