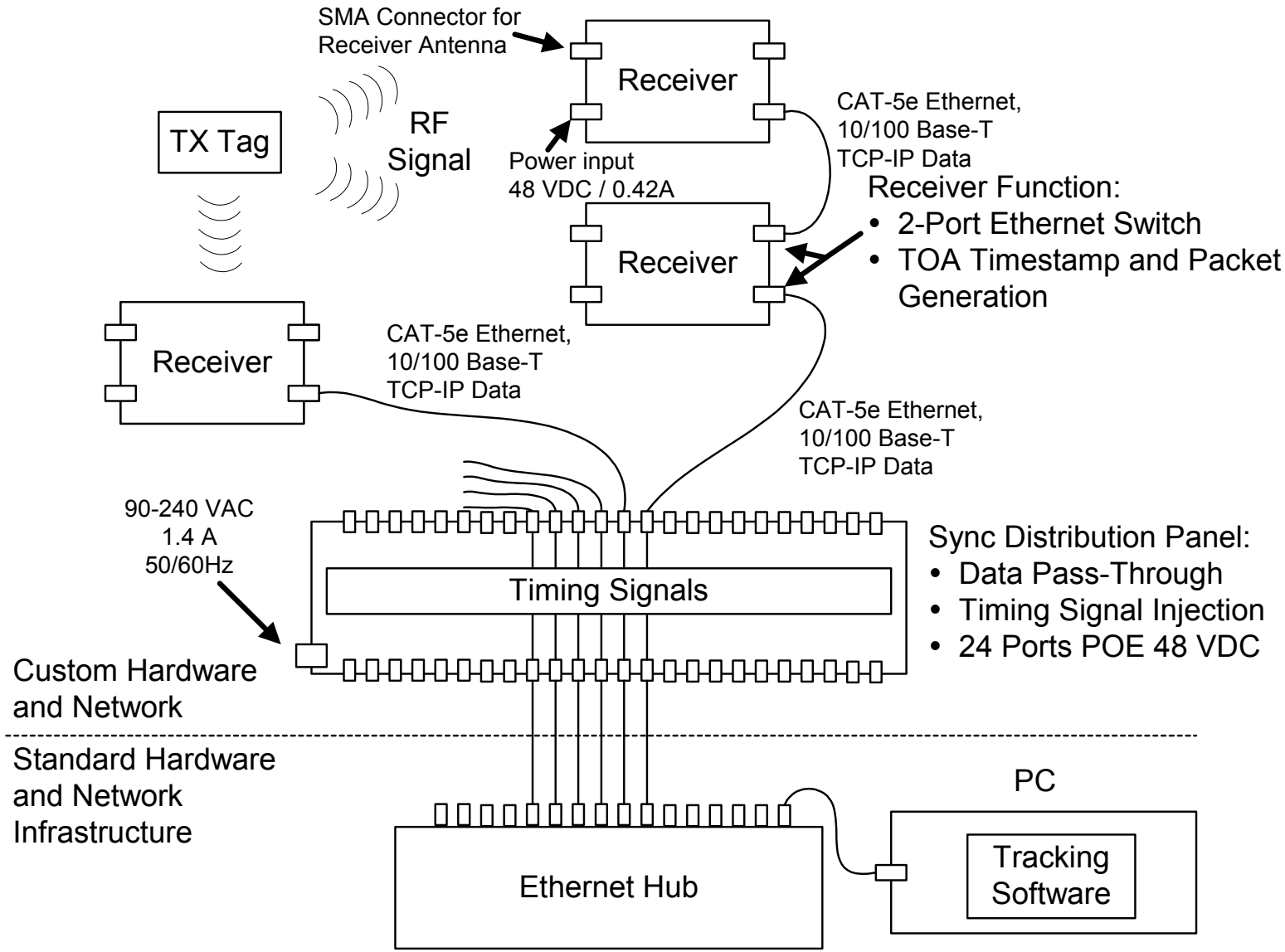
SMA Connector for
Receiver Antenna
Receiver
TX Tag
RF
Signal
Power input
48 VDC / 0.42A
CAT-5e Ethernet,
10/100 Base-T
TCP-IP Data
Receiver Function:
• 2-Port Ethernet Switch
• TOA Timestamp and Packet Generation
Receiver
Receiver
CAT-5e Ethernet,
10/100 Base-T
TCP-IP Data
CAT-5e Ethernet,
10/100 Base-T
TCP-IP Data
90-240 VAC
1.4 A
50/60Hz
Timing Signals
Sync Distribution Panel:
• Data Pass-Through
• Timing Signal Injection
• 24 Ports POE 48 VDC
Custom Hardware
and Network
Standard Hardware
and Network
Infrastructure
PC
Ethernet Hub
Tracking
Software