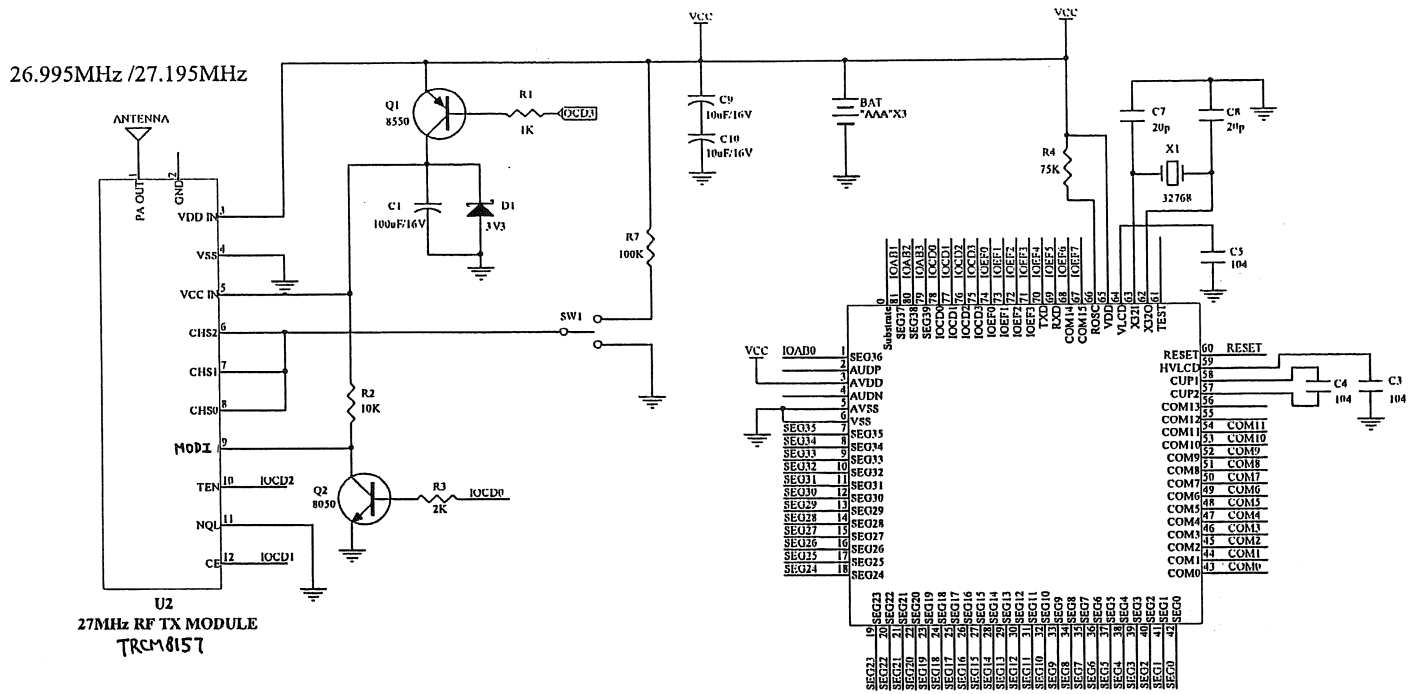

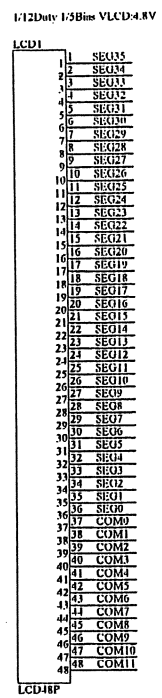

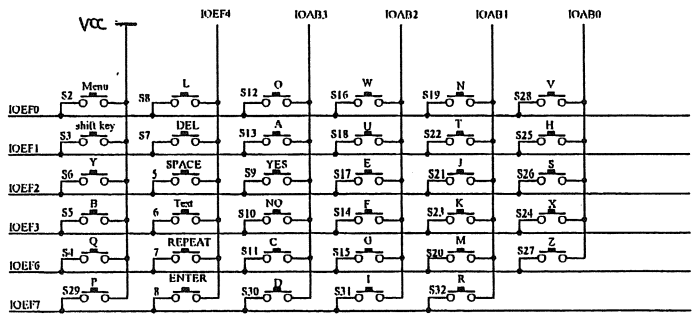

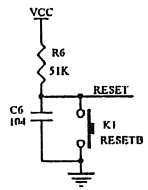

Keyboard & RF Tx

Model No.: 34822

ACEFIELD LIMITED
Product Development & Engineering

Description: IO TX				Rev.: 00
Model Name:	Project No: 0334822	File Name: 8-IPWO127499TB-00	Size: A3	Sheet of
Drawn By: Date:	Dwn By: Date:	Checked By: Date:	Approved By: Date:	