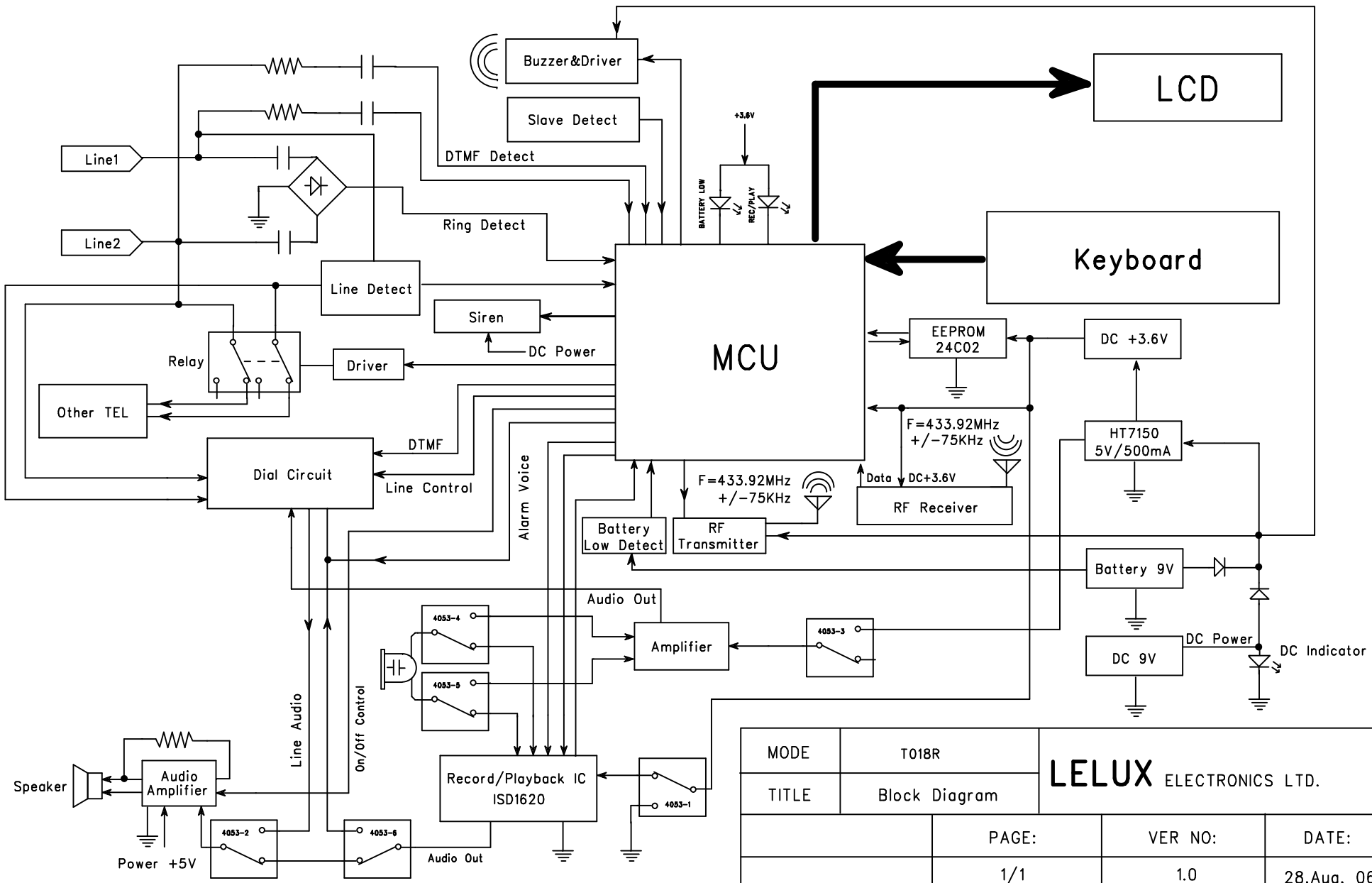

MODE	T018R	LELUX ELECTRONICS LTD.	
TITLE	Block Diagram		
	PAGE:	VER NO:	DATE:
	1/1	1.0	28.Aug. 06
APPROVAL BY:	CHECK BY:	DESIGN BY:	DRAW BY: