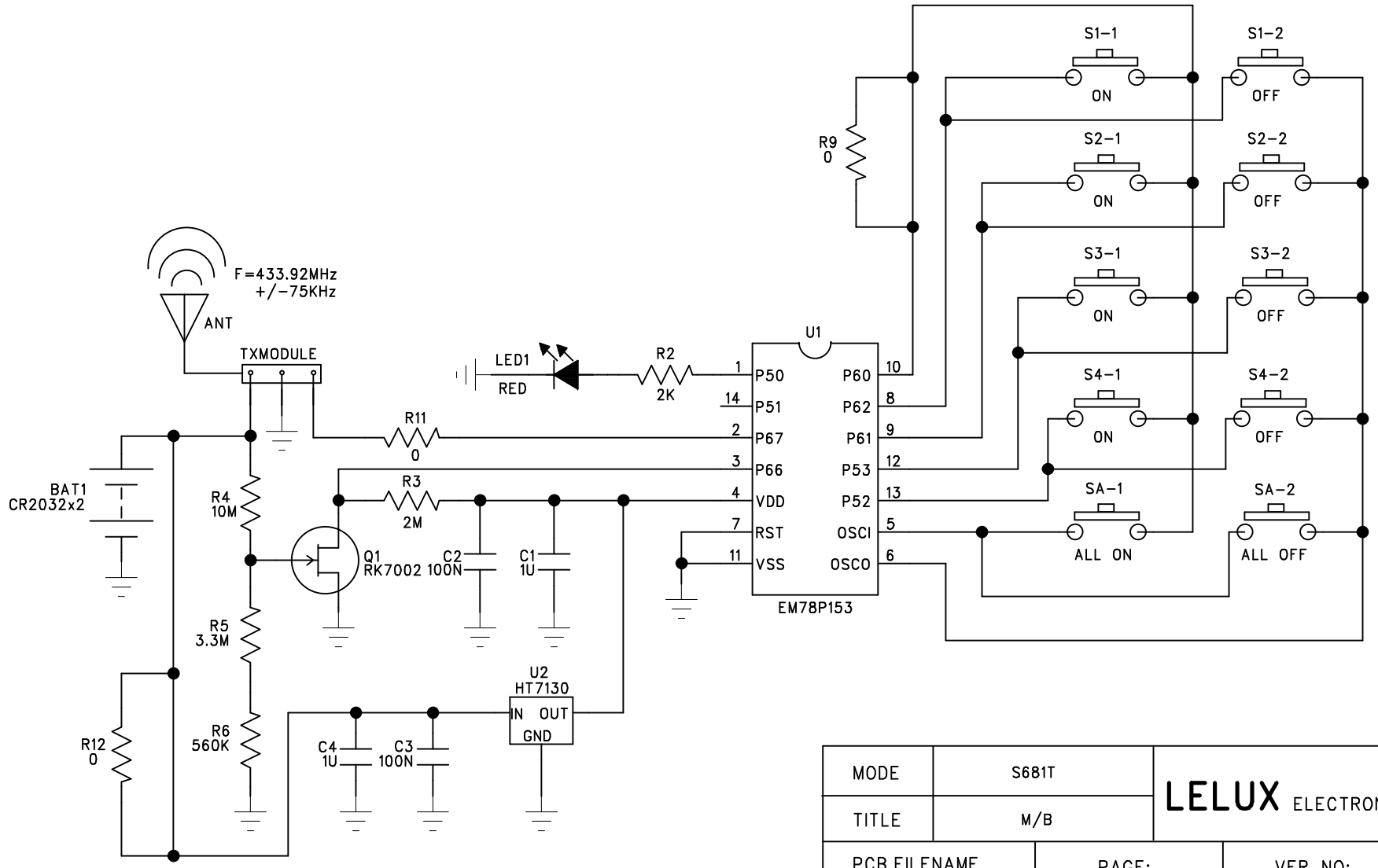

MODE	S681T	LELUX ELECTRONICS LTD.	
TITLE	M/B		
PCB.FILENAME	PAGE:	VER NO:	DATE:
S681T00V10	1/1	1.0	8-Aug-2007
APPROVAL BY:	CHECK BY:	DESIGN BY:	DRAW BY:

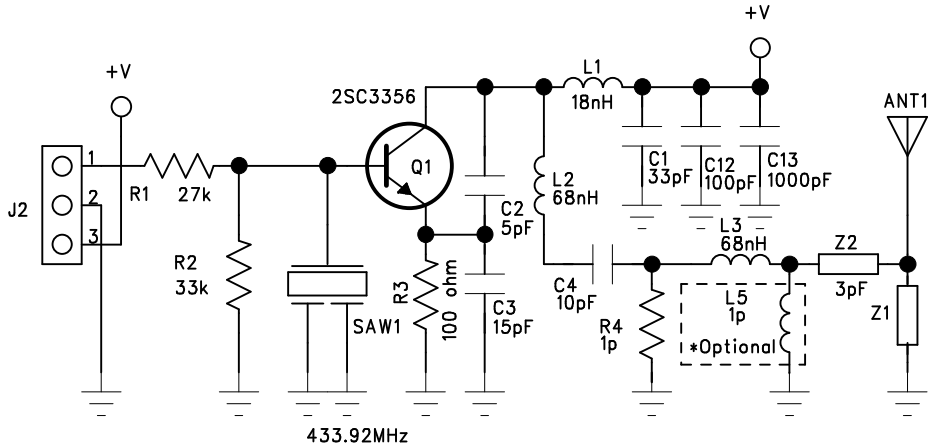

MODE	RF-TX	LELUX ELECTRONICS LTD.	
TITLE	433MHz		
SCH.FILENAME	PAGE:	VER NO:	DATE:
S615RFTXV1.SCH	1 OF 1	1	2005.08.05
APPROVAL BY:	CHECK BY:	DESIGN BY:	DRAW BY:
		HUANG FEI	HUANG FEI