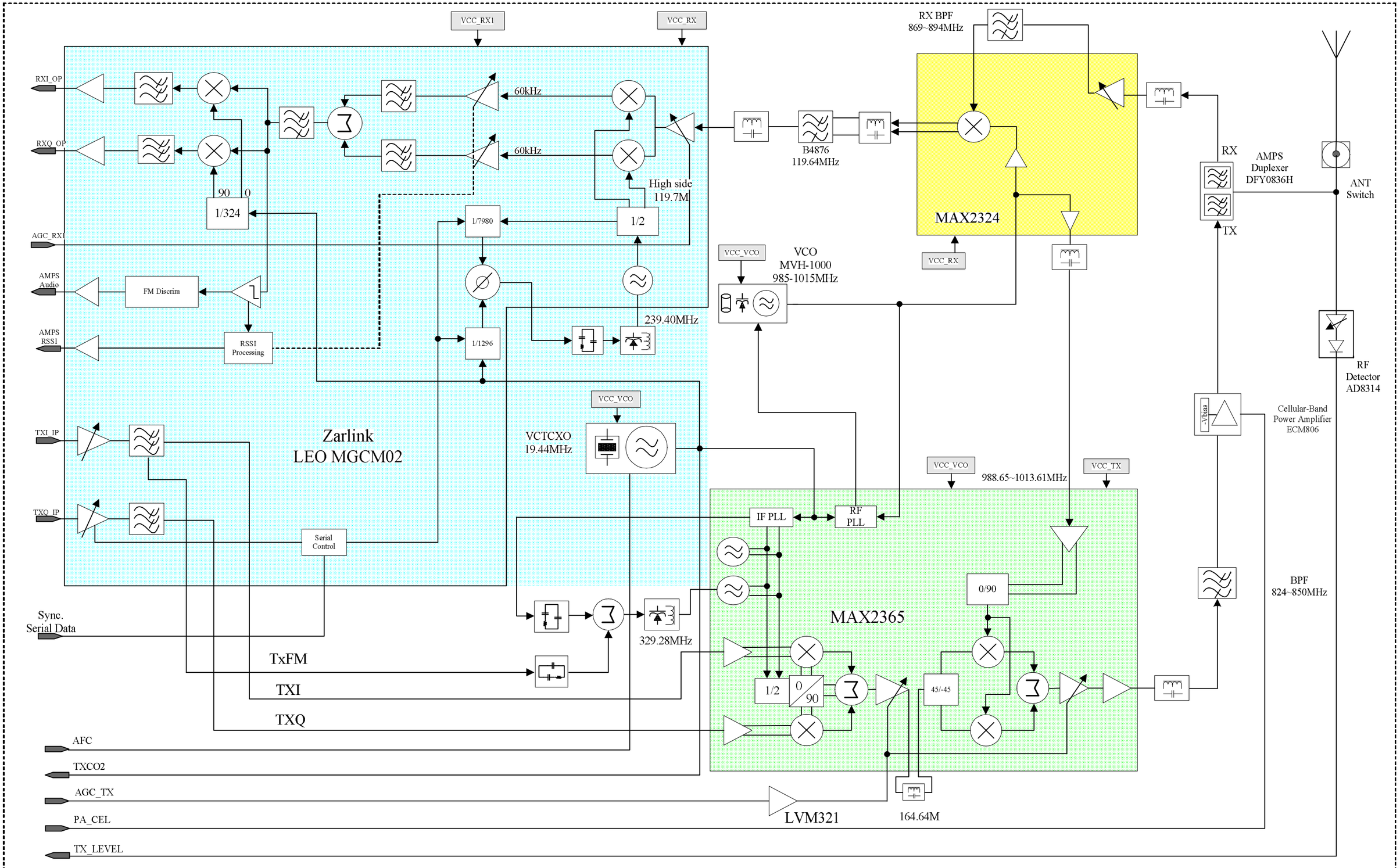

MODE	Tx Freq.	Rx Freq.	LO1 Freq.	LO1 ¥Äf	TxLO	TxIF	TXIFref	nTr	Txref
AMPS	824.01~848.97MHz	869.01~893.97MHz	988.65~1013.61MHz	30kHz	329.28MHz	164.64MHz	240K	648	30kHz
TDMA/800	824.01~848.97MHz	869.01~893.97MHz	988.65~1013.61MHz	30kHz	329.28MHz	164.64MHz	240K	648	30kHz

Telian
53-3 Haan-Dong
Kwangmyung-si
Kyunggi-Do, Korea

Drawn	Checked	Approval	ECO No.	REV.	DATE	COMPANY : Telian corporation
J.D LEE	K.C KIM	K.S Seo		0	July03.03	TITLE : Dual-Mode RF parts BLOCK
						SIZE : A3 — Model Name FTD8500 — SHEET : 1 OF 2