TOYMAX INC.
FCC ID : NLKTMI80888C27
JOB : 883U1
EXHIBIT # : 4

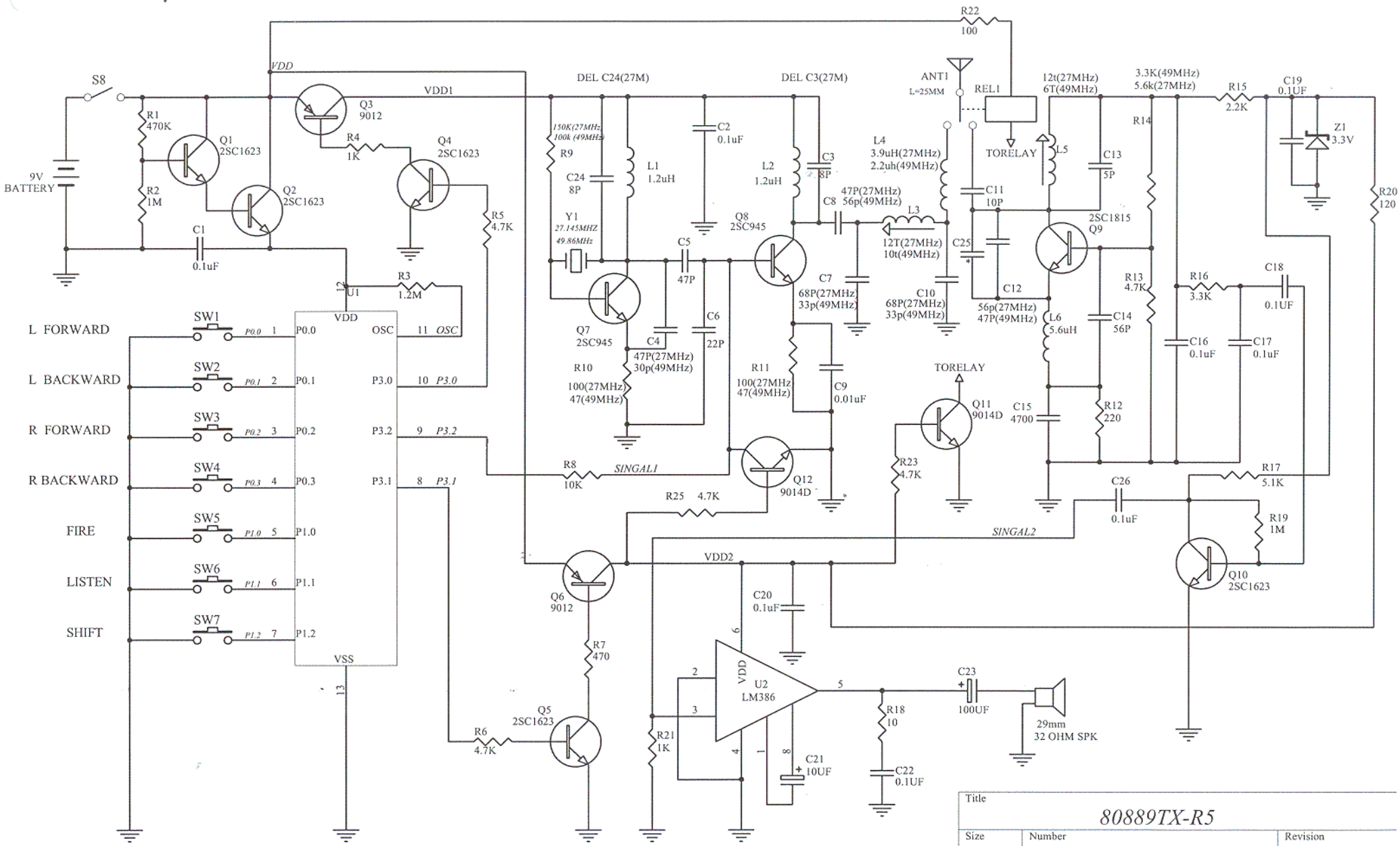

Title		
80889TX-R5		
Size A4	Number	Revision
Date: 28-Jul-2001	Sheet of 1 OF 1	
File: D:\pyee\lzl\80889\SCH\80889TX-R5.sch	Drawn By: ZLLIU	