ISSUE	CHANGE DETAIL	DATE	CHECKED	APP.

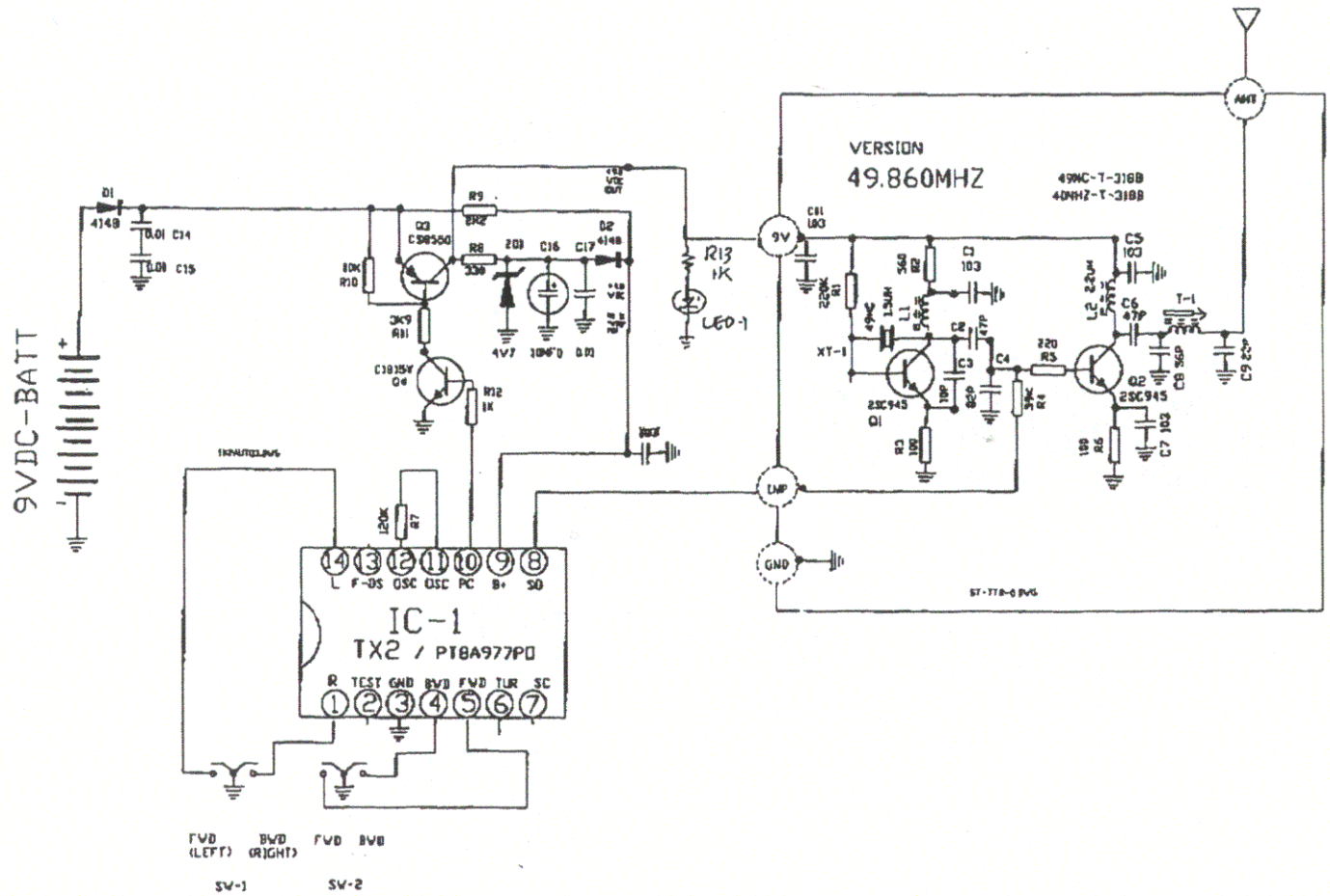

DO NOT SCALE DRAWING	TITLE SCHEMATIC DIAGRAM		Q'TY	UNIT
UNLESS OTHERWISE SPECIFIC DEC ±0.1 ANGLE ±1°	MATERIAL 49.860MHZ	VERSION FCC	FINISH	SCALE
GENERAL DRAFT	MODEL ST LUGE CAR	SECTION – TX	PART NO. SC-SL-302-49	
UNLESS OTHERWISE SPECIFIC WALL THICKNESS	DRAWN BLCC 27/04/2001	CHECKED	APPROVED	SIZE A4

Dynamic industries co. ltd.