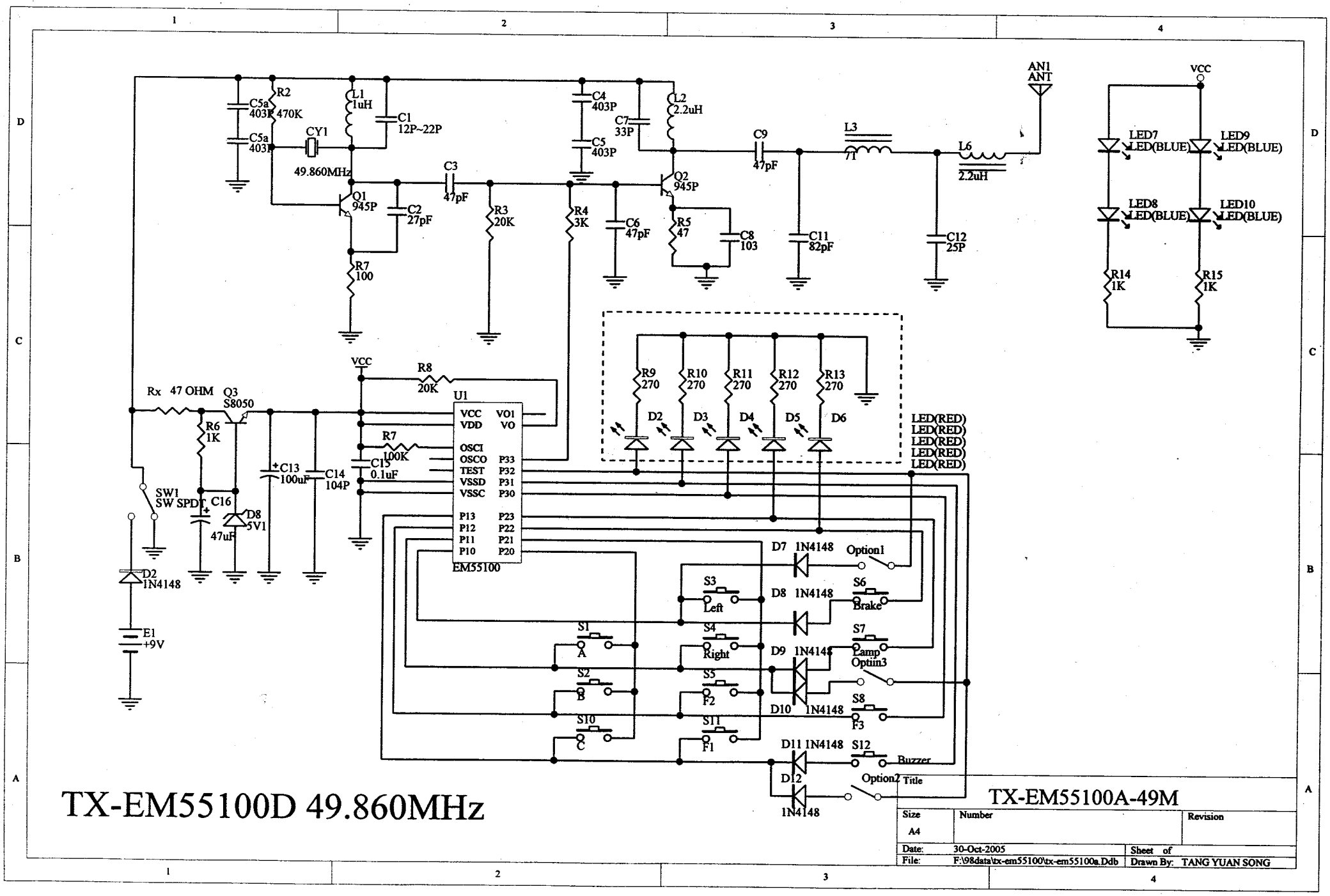
TX-EM55100D 49.860MHz
TX-EM55100A-49M
Size
A4
Number
Revision
Date: 30-Oct-2005
Sheet of
File: F:\98data\tx-em55100\tx-em55100a.Ddb
Drawn By: TANG YUAN SONG
Title
AN1
ANT
VCC
C5a
403P
R2
470K
L1
1uH
C1
12P~22P
CY1
49.860MHz
Q1
945P
C2
27pF
C3
47pF
R3
20K
R4
3K
C4
403P
C5
403P
C7
33P
L2
2.2uH
Q2
945P
C6
47pF
R5
47
C8
103
C9
47pF
L3
71
C11
82pF
L6
2.2uH
C12
25P
R7
100
LED7
LED(BLUE)
LED9
LED(BLUE)
LED8
LED(BLUE)
LED10
LED(BLUE)
R14
1K
R15
1K
R8
20K
U1
VCC
VDD
VO1
VO
OSCI
OSCO
TEST
VSSD
VSSC
P33
P32
P31
P30
P13
P12
P11
P10
P23
P22
P21
P20
EM55100
R7
100K
C15
0.1uF
C13
100uF
C14
104P
Rx 47 OHM
Q3
S8050
R6
1K
SW1
SW SPDT
C16
47uF
D8
5V1
D2
1N4148
E1
+9V
R9
270
R10
270
R11
270
R12
270
R13
270
D2
D3
D4
D5
D6
LED(RED)
LED(RED)
LED(RED)
LED(RED)
LED(RED)
D7 1N4148
Option1
S3
Left
D8 1N4148
S6
Brake
S1
A
S4
Right
D9 1N4148
S7
Lamp
Optim3
S2
B
S5
F2
D10 1N4148
S8
F3
S10
C
S11
F1
D11 1N4148
S12
Buzzer
D12
1N4148
Option2