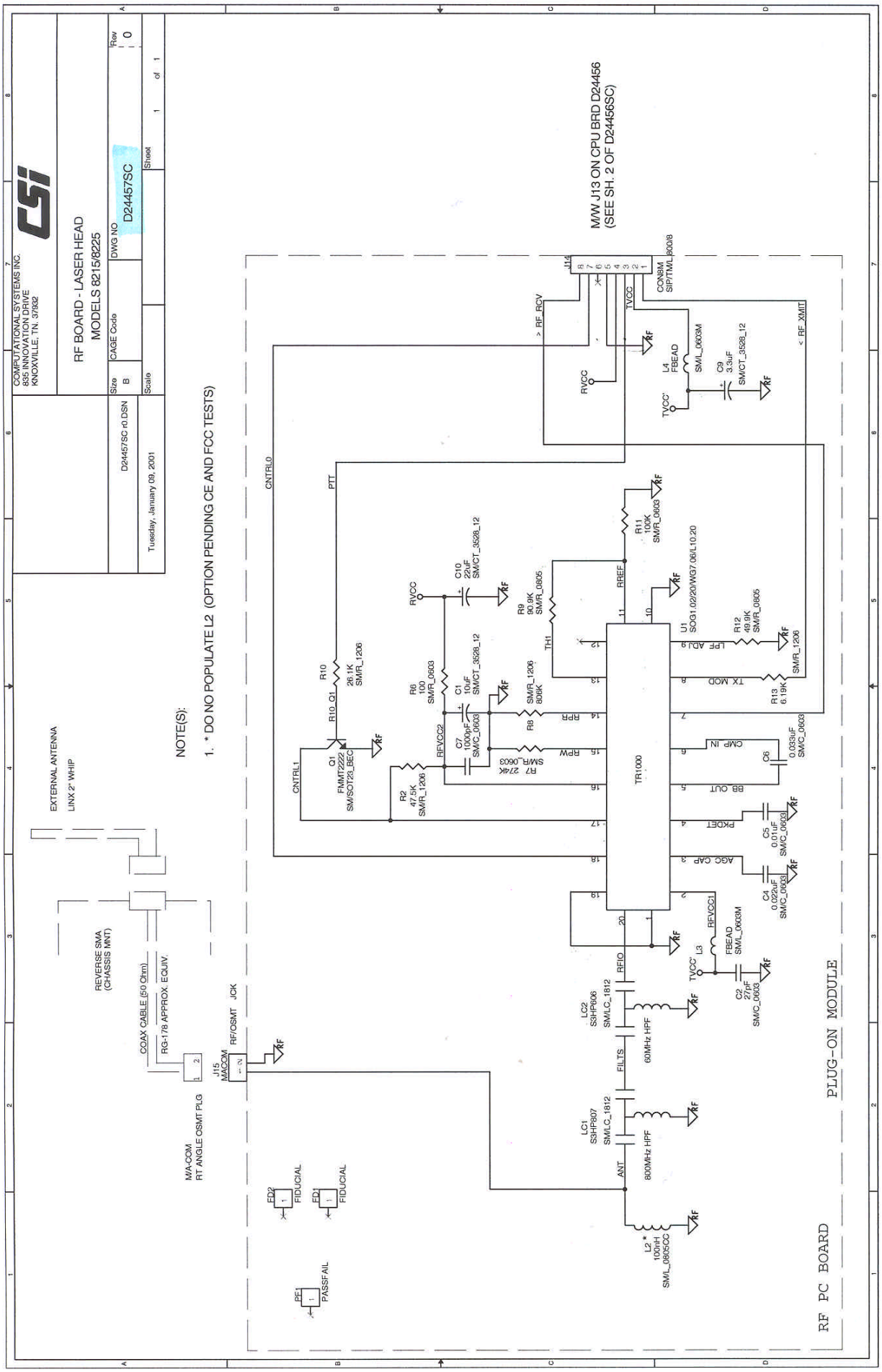
COMPUTATIONAL SYSTEMS INC.
835 INNOVATION DRIVE
KNOXVILLE, TN. 37932
RF BOARD - LASER HEAD
MODELS 8215/8225
D24457SC
D24457SC r0.DSN
Tuesday, January 09, 2001
NOTE(S):
1. * DO NO POPULATE L2 (OPTION PENDING CE AND FCC TESTS)
M/W J13 ON CPU BRD D24456
(SEE SH. 2 OF D24456SC)
EXTERNAL ANTENNA
LINX 2" WHIP
REVERSE SMA
(CHASSIS MNT)
COAX CABLE (50 Ohm)
RG-178 APPROX. EQUIV.
M/A-COM
RT ANGLE OSMT PLG
RF/OSMT JCK
J15
MACOM
FIDUCIAL
PASSFAIL
TR1000
PLUG-ON MODULE
RF PC BOARD