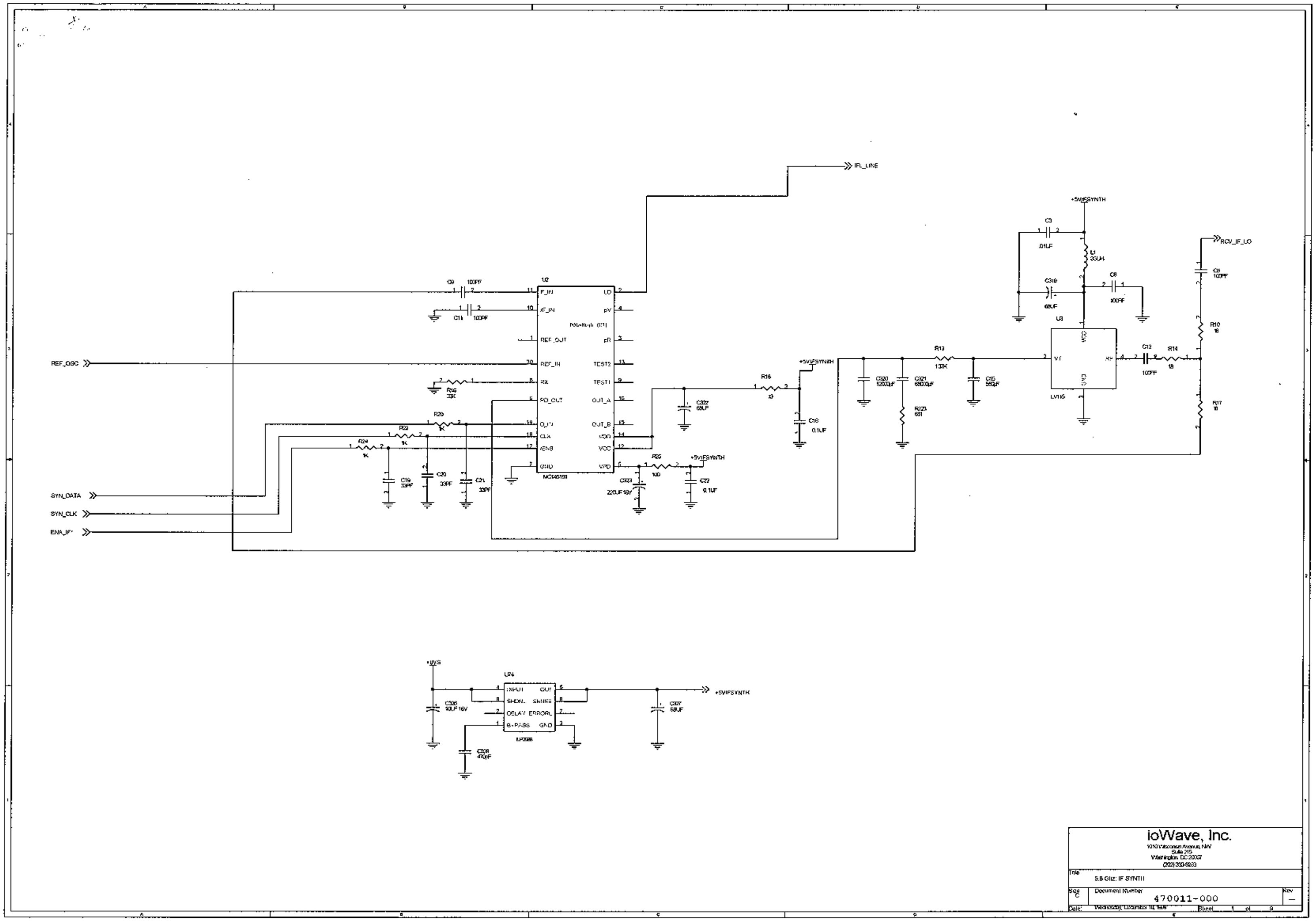
IFL_LINE
+5VIFSYNTH
RCV_IF_LO
U2
U1
U4
F_IN
IF_IN
REF_OUT
REF_IN
RX
PD_OUT
D_IN
CLK
ENB
GND
LD
TEST2
TEST1
OUT_A
OUT_B
VDD
VCC
VPD
MC145181
LV115
VT
RF
LP2988
INPUT
SHDN
DELAY
BYPASS
OUT
SENSE
ERROR
REF_OSC
SYN_DATA
SYN_CLK
ENA_IF*
ioWave, Inc.
Title
5.8 Ghz: IF SYNTH
Size
C
Document Number
470011-000
Rev
Date:
Sheet 1 of 9

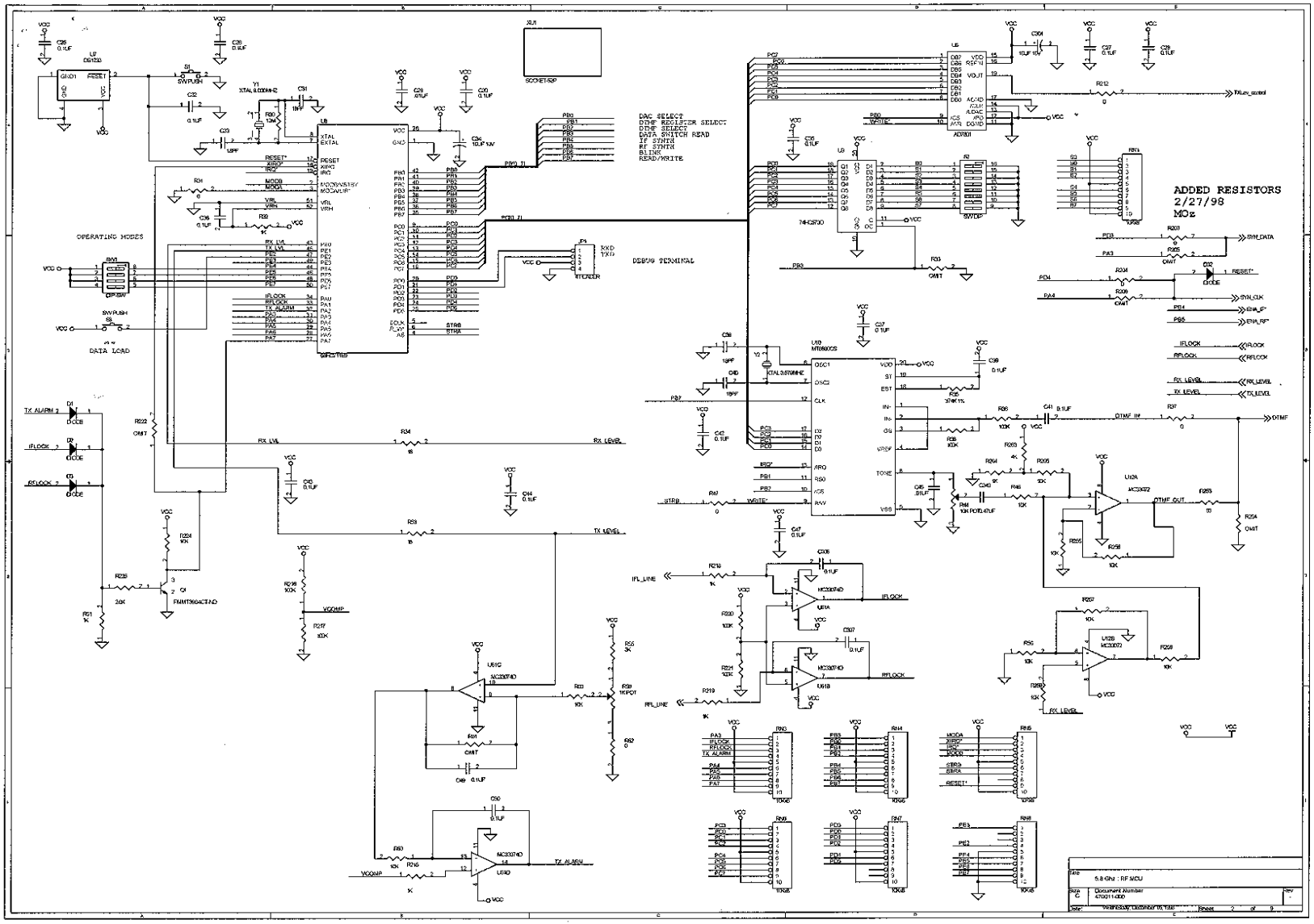
ADDED RESISTORS
2/27/98
MOz
DAC SELECT
DDMF REGISTER SELECT
DDMF SELECT
DATA SWITCH READ
IF SYNTH
RF SYNTH
BLINK
READ/WRITE
OPERATING MODES
DATA LOAD
DEBUG TERMINAL
SOCKET-SIP
TX ALARM 2
IFLOCK 2
RFLOCK 2
IFL_LINE
RFL_LINE
RX LEVEL
TX LEVEL
VCOAMP
TX ALARM
DTMF
SYN_DATA
SYN_CLK
ENA_LP*
ENA_RP*
RESET*
IFLOCK
RFLOCK
RX_LEVEL
TX_LEVEL
DTMF_IN
DTMF_OUT
TXLev_scaled
Title
5.8 Ghz : RF MCU
Size
C
Document Number
470011-000
Rev
Date: Wednesday, December 16, 1998
Sheet 2 of 9

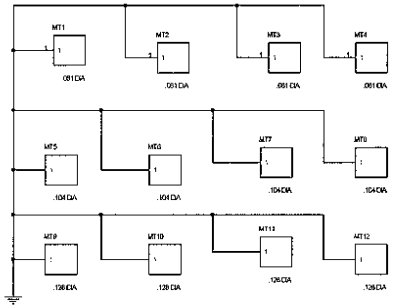

Title	MOUNTING HOLES	
Size C	Document Number 470011-001	Rev -
Date: Wednesday, December 15, 1999	Sheet 3 of 6	

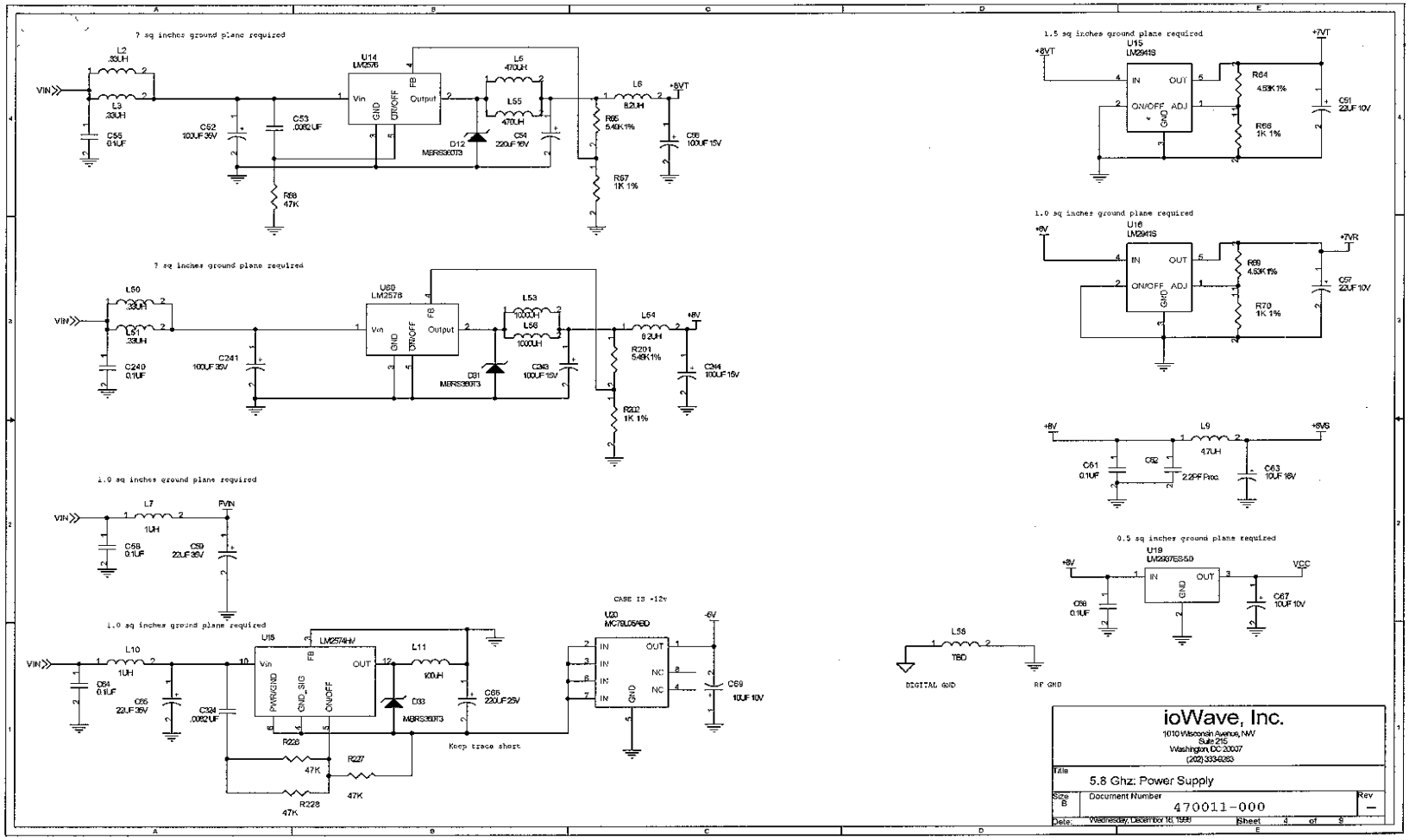
? sq inches ground plane required
VIN
L2 .33UH
L3 .33UH
C56 0.1UF
C52 100UF 35V
C53 .0082UF
R68 47K
U14 LM2576
Vin
GND
ON/OFF
FB
Output
L5 470UH
L55 470UH
D12 MBRS360T3
C54 220UF 16V
L6 8.2UH
+8VT
R66 5.49K 1%
R67 1K 1%
C58 100UF 15V
? sq inches ground plane required
L50 .33UH
L51 .33UH
C240 0.1UF
C241 100UF 35V
U60 LM2576
L53 100UH
L56 1000UH
D31 MBRS360T3
C243 100UF 15V
L64 8.2UH
+8V
R201 5.49K 1%
R202 1K 1%
C244 100UF 15V
1.0 sq inches ground plane required
L7 1UH
PVIN
C58 0.1UF
C59 22UF 35V
1.0 sq inches ground plane required
L10 1UH
C54 0.1UF
C55 22UF 35V
C324 .0082UF
U15 LM2574HJ
PWR/GND
GND_SIG
ON/OFF
OUT
L11 10UH
D33 MBRS360T3
C65 220UF 25V
R226 47K
R227 47K
R228 47K
Keep trace short
CASE IS +12v
U20 MC79L05ABD
IN
OUT
NC
GND
-5V
C69 10UF 10V
1.5 sq inches ground plane required
U15 LM2941S
+8VT
+7VT
IN
OUT
ON/OFF
ADJ
GND
R64 4.53K 1%
R65 1K 1%
C51 22UF 10V
1.0 sq inches ground plane required
U16 LM2941S
+8V
+7VR
R69 4.53K 1%
R70 1K 1%
C57 22UF 10V
L9 4.7UH
+8VG
C61 0.1UF
C62 2.2PF Proc.
C63 10UF 16V
0.5 sq inches ground plane required
U19 LM2937ESSD
VCC
C68 0.1UF
C67 10UF 10V
L58 TBD
DIGITAL GND
RF GND
ioWave, Inc.
1010 Wisconsin Avenue, NW
Suite 215
Washington, DC 20007
(202) 333-6283
Title
5.8 Ghz: Power Supply
Size B
Document Number
470011-000
Rev
Date: Wednesday, December 16, 1998
Sheet 4 of 9

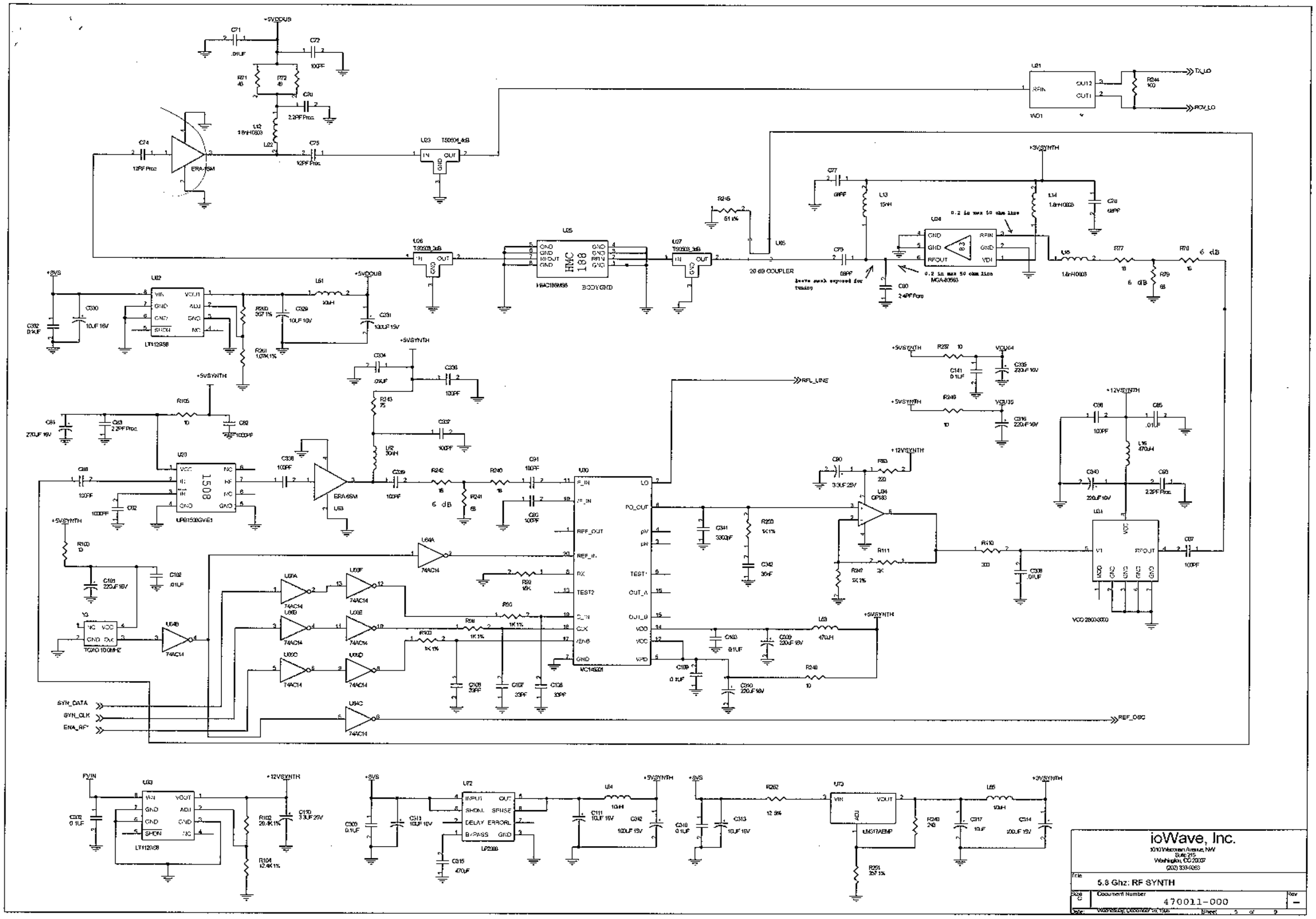
+5VDOUB
ERA-5SM
HMC188
HMC189MS8
20 dB COUPLER
MGA-86563
0.2 in max 50 ohm line
leave mask exposed for tuning
VCO190-5800
MC145201
OP180
ERA-5SM
1508
UPB1508GV-E1
LT1129S8
LT1120CS8
LP2989
LM317AEMP
TCXO 10.0MHZ
74AC14
SYN_DATA
SYN_CLK
ENA_RF
REF_OSC
RFL_LINE
TX_LO
RCV_LO
+5VSYNTH
+12VSYNTH
+3VSYNTH
+8VS
PVIN
6 dB
ioWave, Inc.
Title
5.8 Ghz: RF SYNTH
Size
C
Document Number
470011-000
Rev
—
Sheet 5 of 9

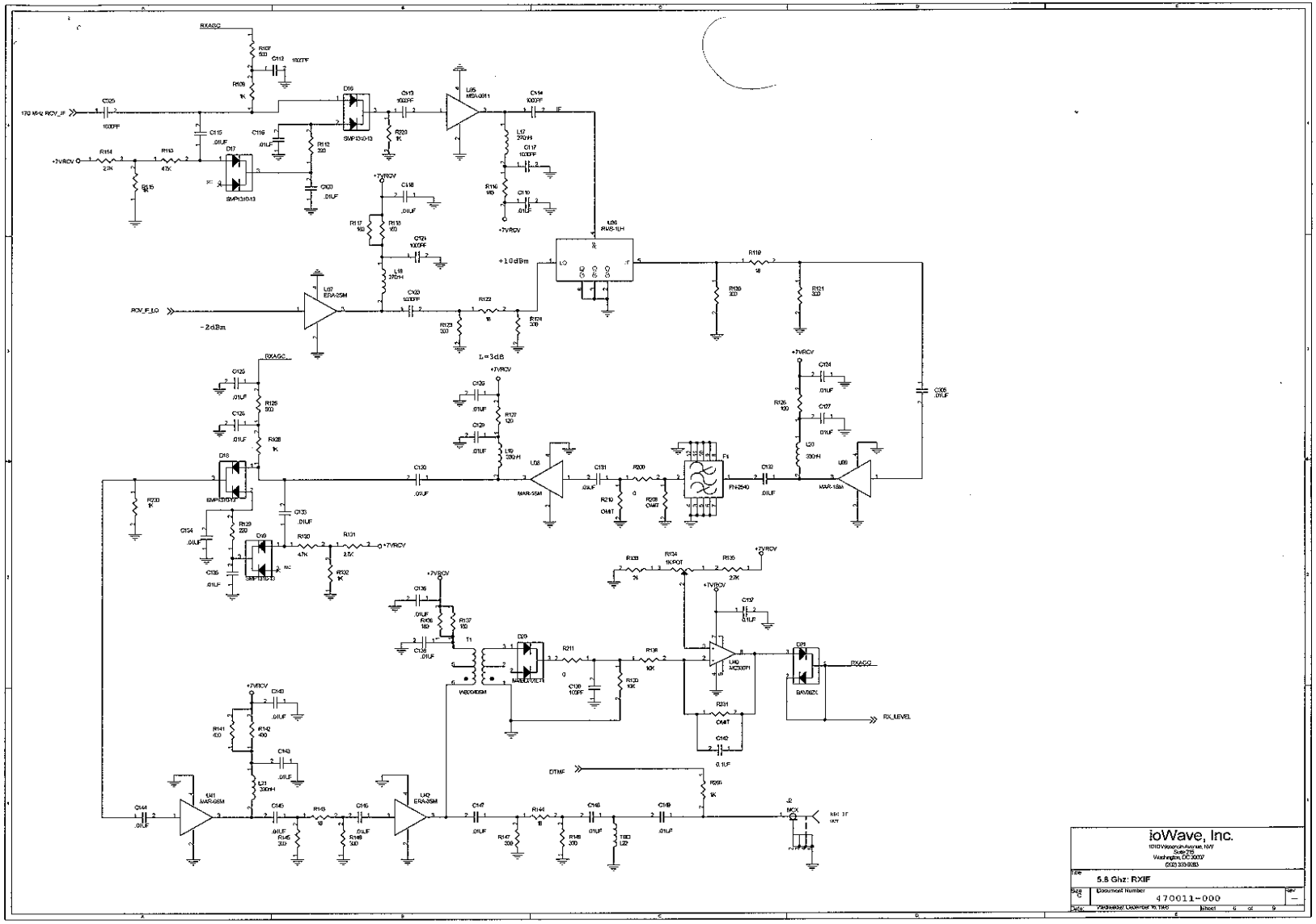
RXAGC
170 MHz RCV_IF
+7VRCV
RCV_F_LO
-2dBm
+10dBm
L=3dB
IF
LO
RF
GND
GND
GND
GND
U36
RMS-1LH
U37
ERA-2SM
U38
MSA-0611
U39
MAR-3SM
U40
MAR-1SM
U41
MAR-8SM
U42
ERA-2SM
U49
MC3001
F5
FN-2540
T1
VAB-0406M
D19
MMBV101LT1
D20
BAV99ZX
D21
BAV99ZX
D16
SMP1340-13
D17
SMP1340-13
D18
SMP1340-13
D19
SMP1340-13
D15
SMP1340-13
R134
5K POT
DTMF
RX_LEVEL
J6
MCX
ioWave, Inc.
1010 Wisconsin Avenue, NW
Suite 215
Washington, DC 20007
(202) 333-0333
Title
5.8 Ghz: RXIF
Size
C
Document Number
470011-000
Rev
—
Date: Wednesday, December 18, 1996
Sheet 4 of 9

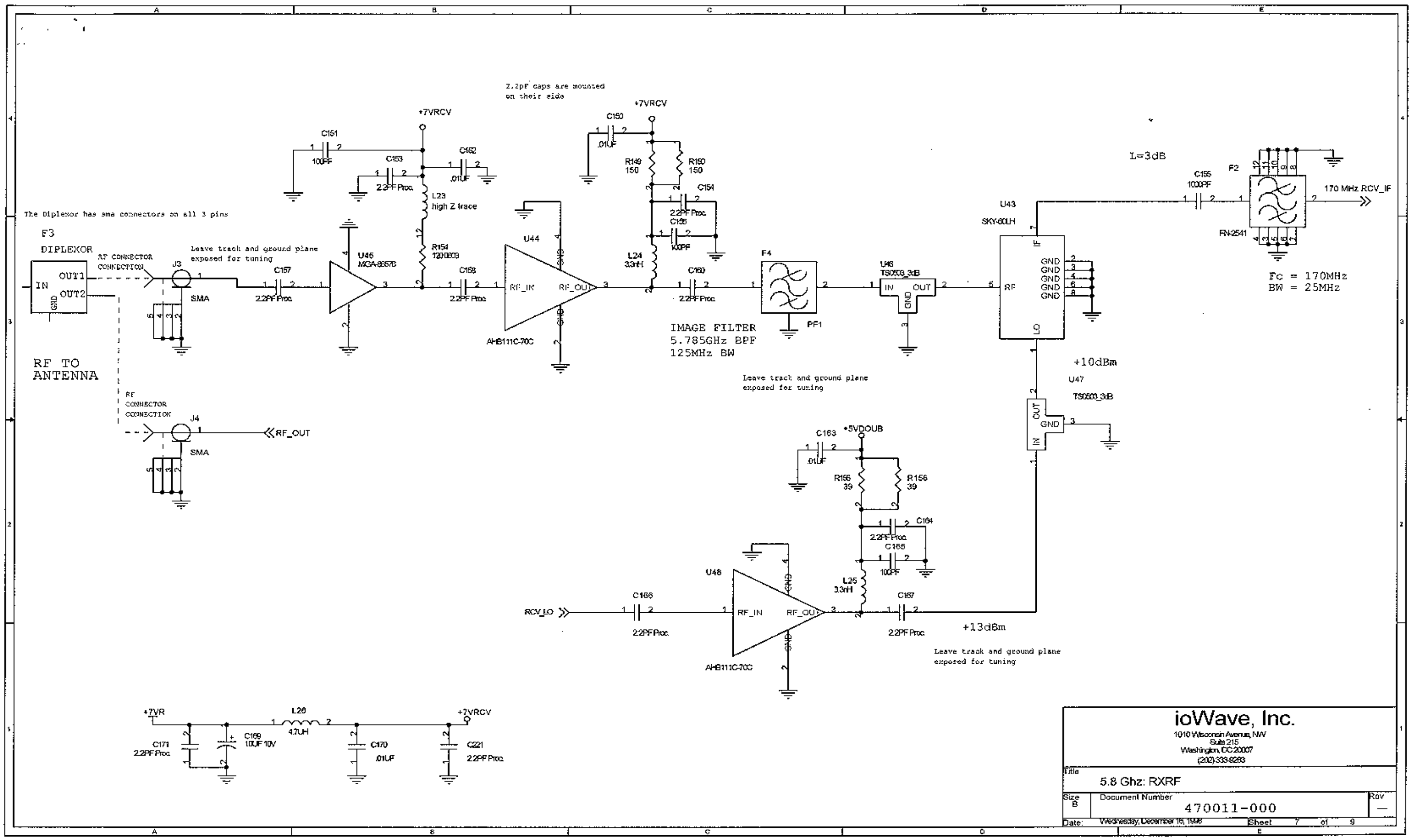

The Diplexor has sma connectors on all 3 pins
F3
DIPLEXOR
RF TO ANTENNA
RF CONNECTOR CONNECTION
Leave track and ground plane exposed for tuning
2.2pF caps are mounted on their side
+7VRCV
U45
MGA-86576
U44
AHB111C-70C
L23
high Z trace
R154
1200603
IMAGE FILTER
5.785GHz BPF
125MHz BW
F4
PF1
U46
TS0503_3dB
U43
SKY-60LH
L=3dB
C155
1000PF
F2
FN-2541
170 MHz RCV_IF
Fc = 170MHz
BW = 25MHz
+10dBm
U47
TS0503_3dB
+5VDOUB
U48
AHB111C-70C
RCV_LO
+13dBm
RF_OUT
SMA
+7VR
L26
47UH
C169
10UF 10V
ioWave, Inc.
1010 Wisconsin Avenue, NW
Suite 215
Washington, DC 20007
(202) 333-8283
Title
5.8 Ghz: RXRF
Size B
Document Number
470011-000
Rev
Date: Wednesday, December 16, 1998
Sheet 7 of 9

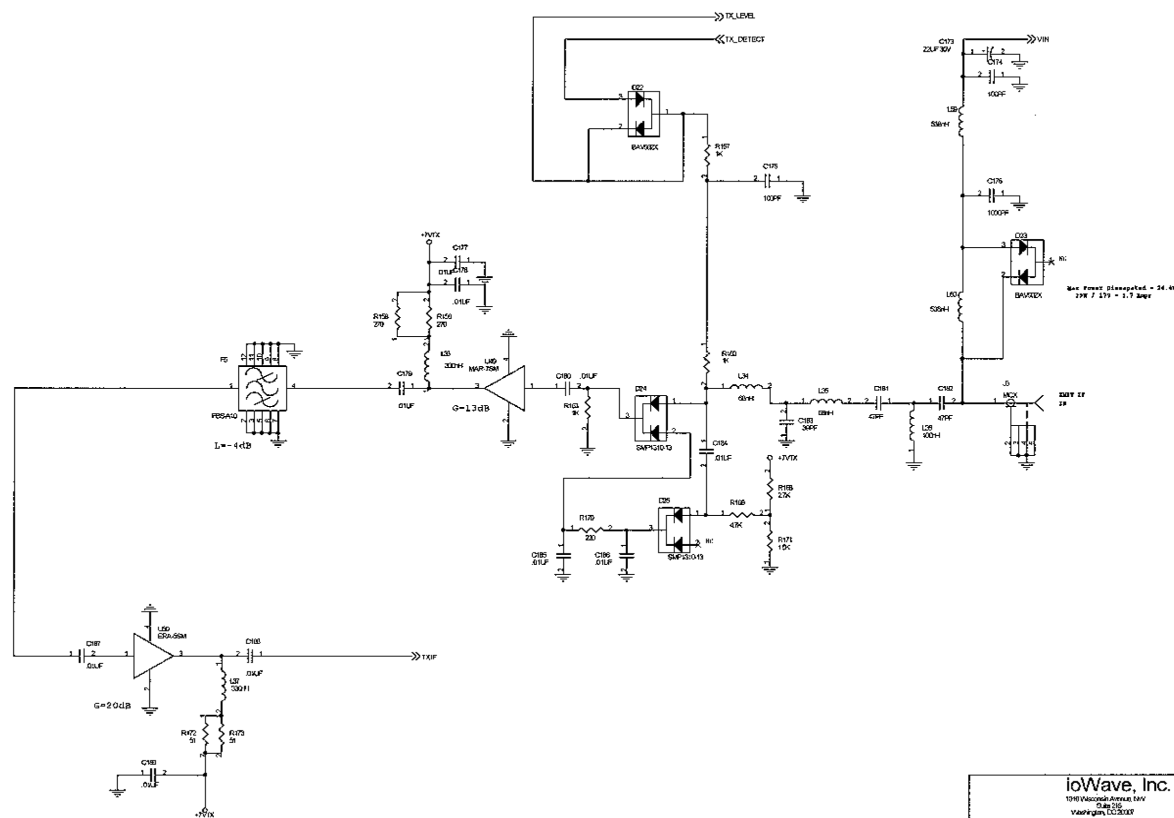

ioWave, Inc. 1010 Wisconsin Avenue, NW Suite 215 Washington, DC 20007 (202) 330-6080	
Title: 5.8 Ghz: TXIF	
Size: C	Document Number: 470011-000
Rev: —	
Date: Wednesday, December 15, 1999	Sheet 6 of 9

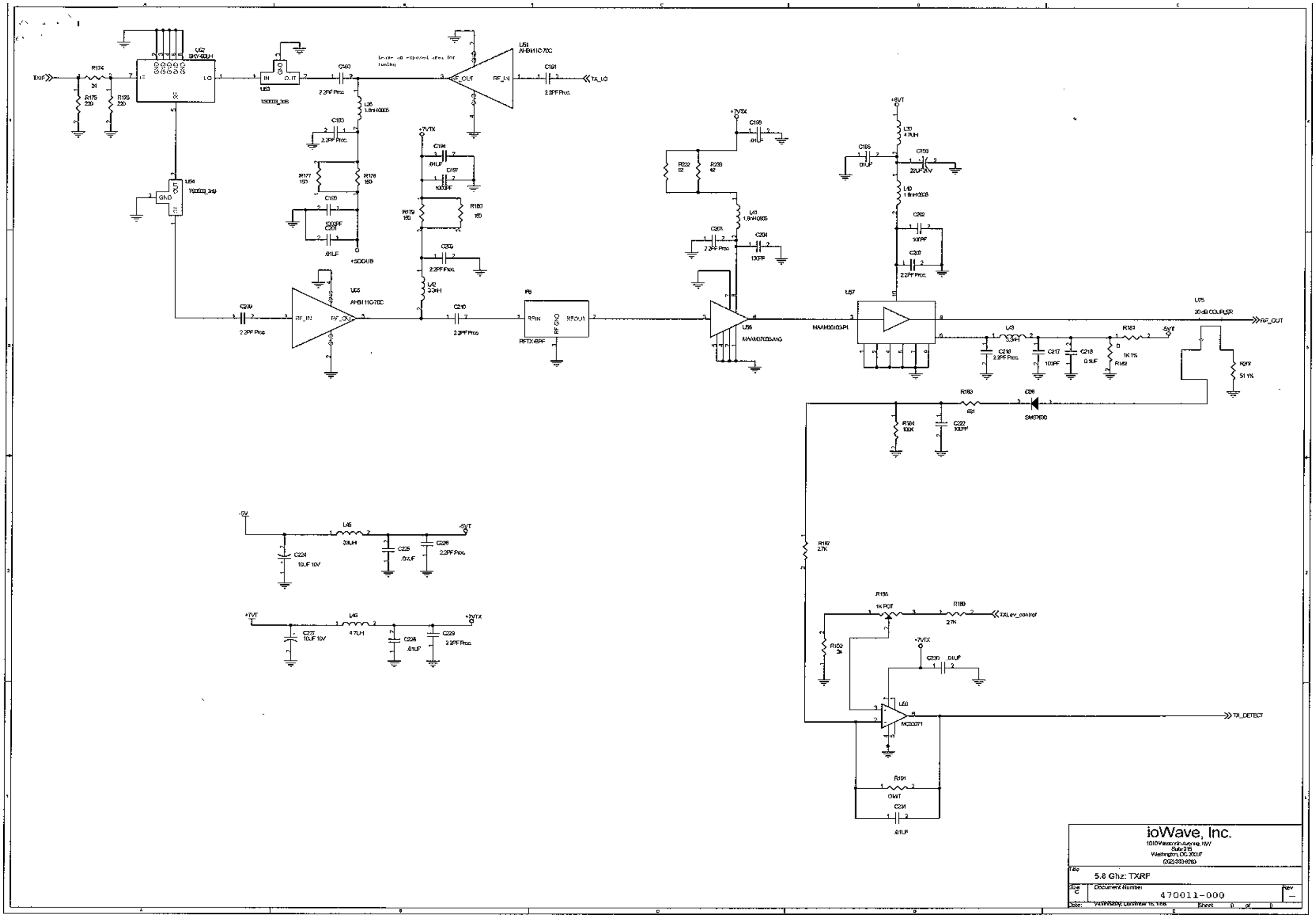

TXIF
TX_LO
RF_OUT
TX_DETECT
TXLev_control
30dB COUPLER
RFTX-BPF
MAAM02103-PI
AH8111C-70C
ioWave, Inc.
5.8 Ghz: TXRF
Document Number
470011-000