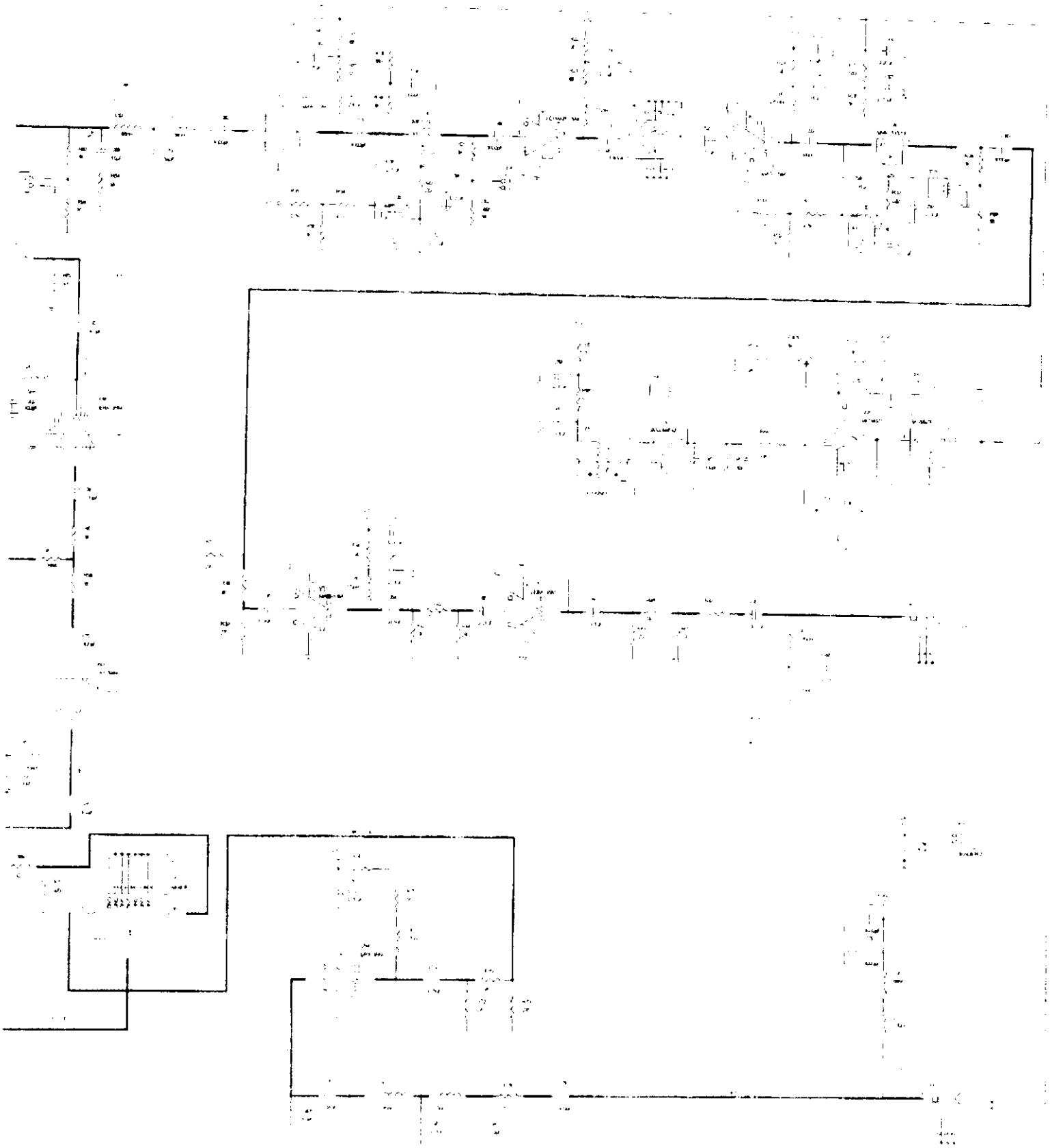

IOWAVE, INC.

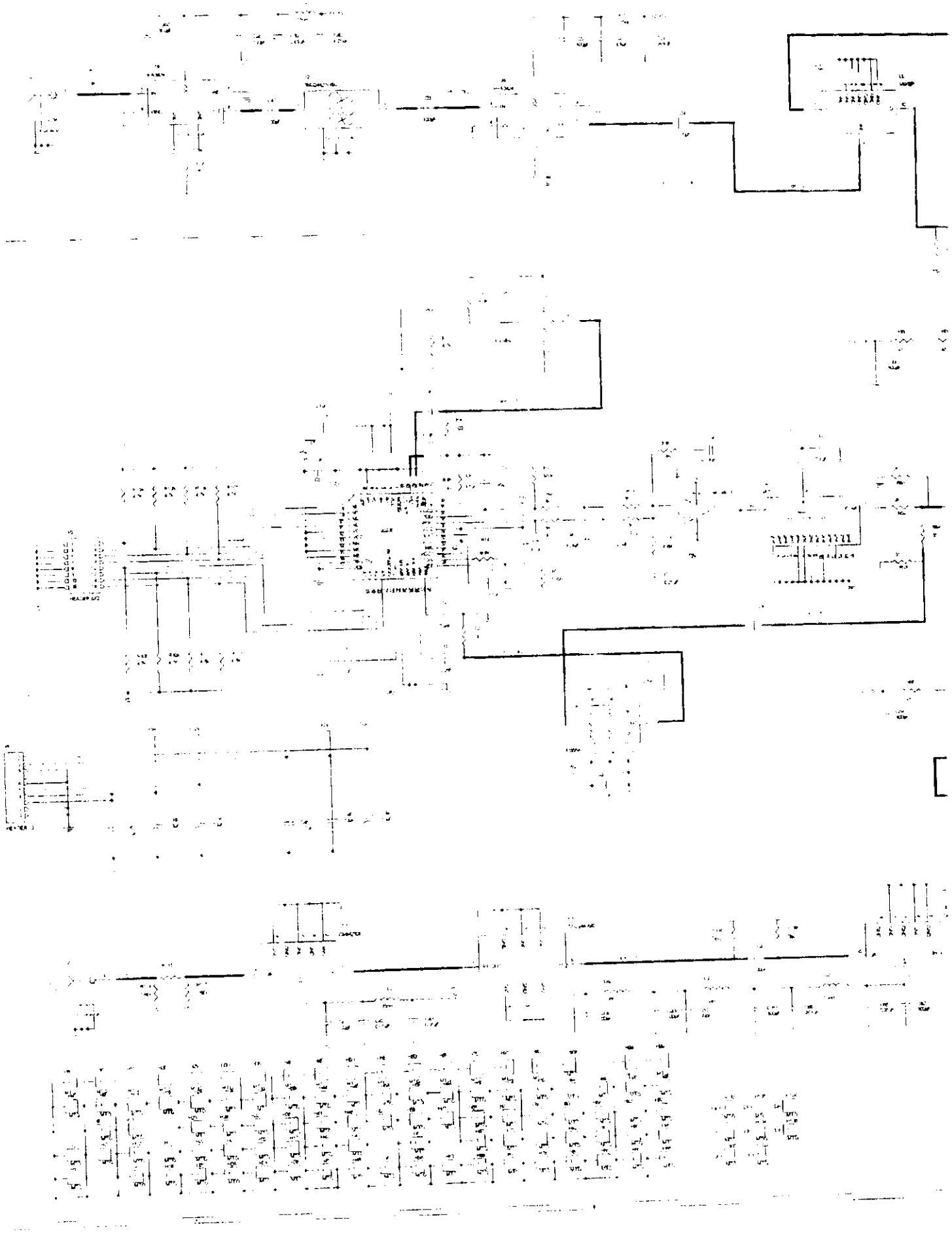

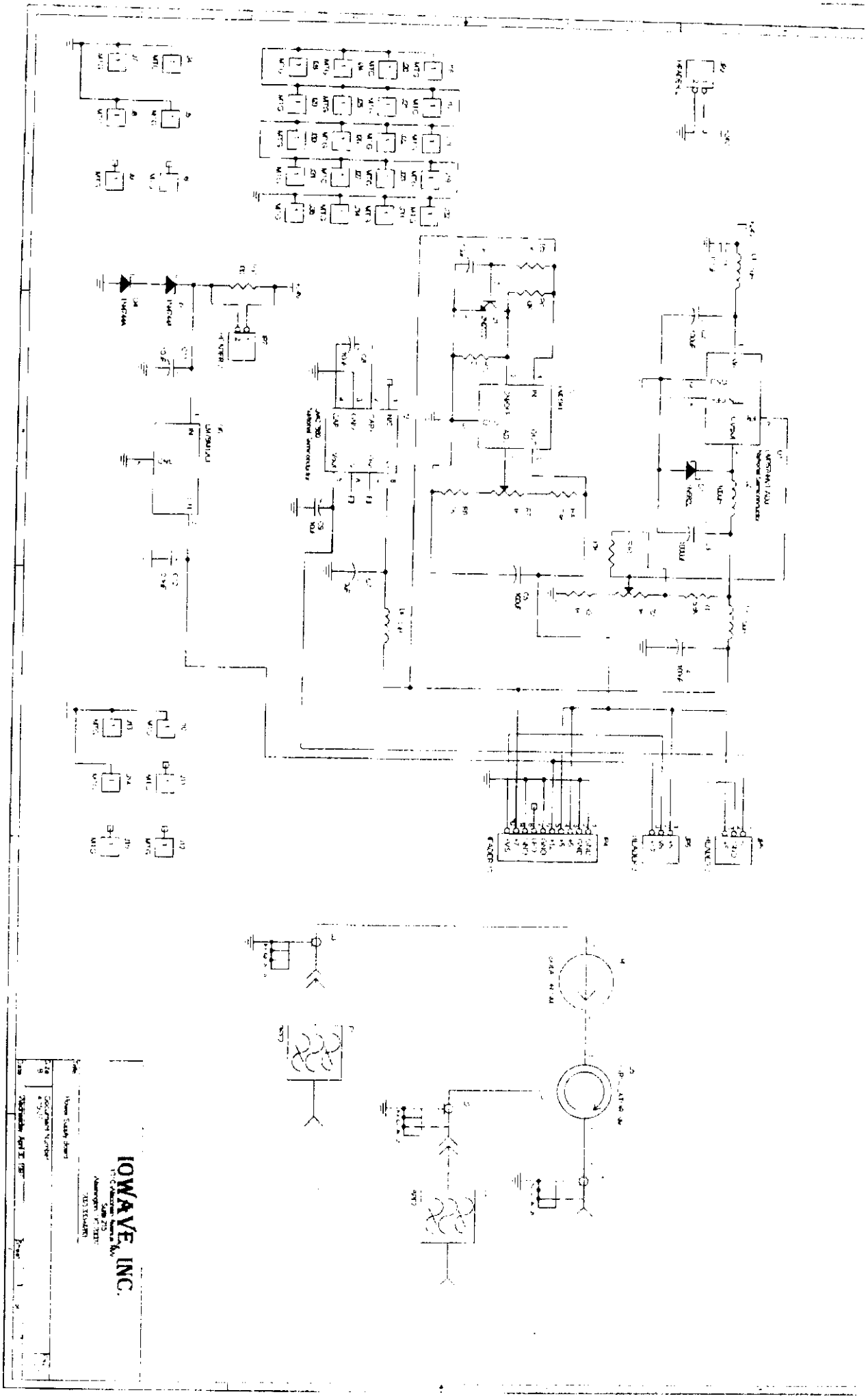
IOWAVE INC.

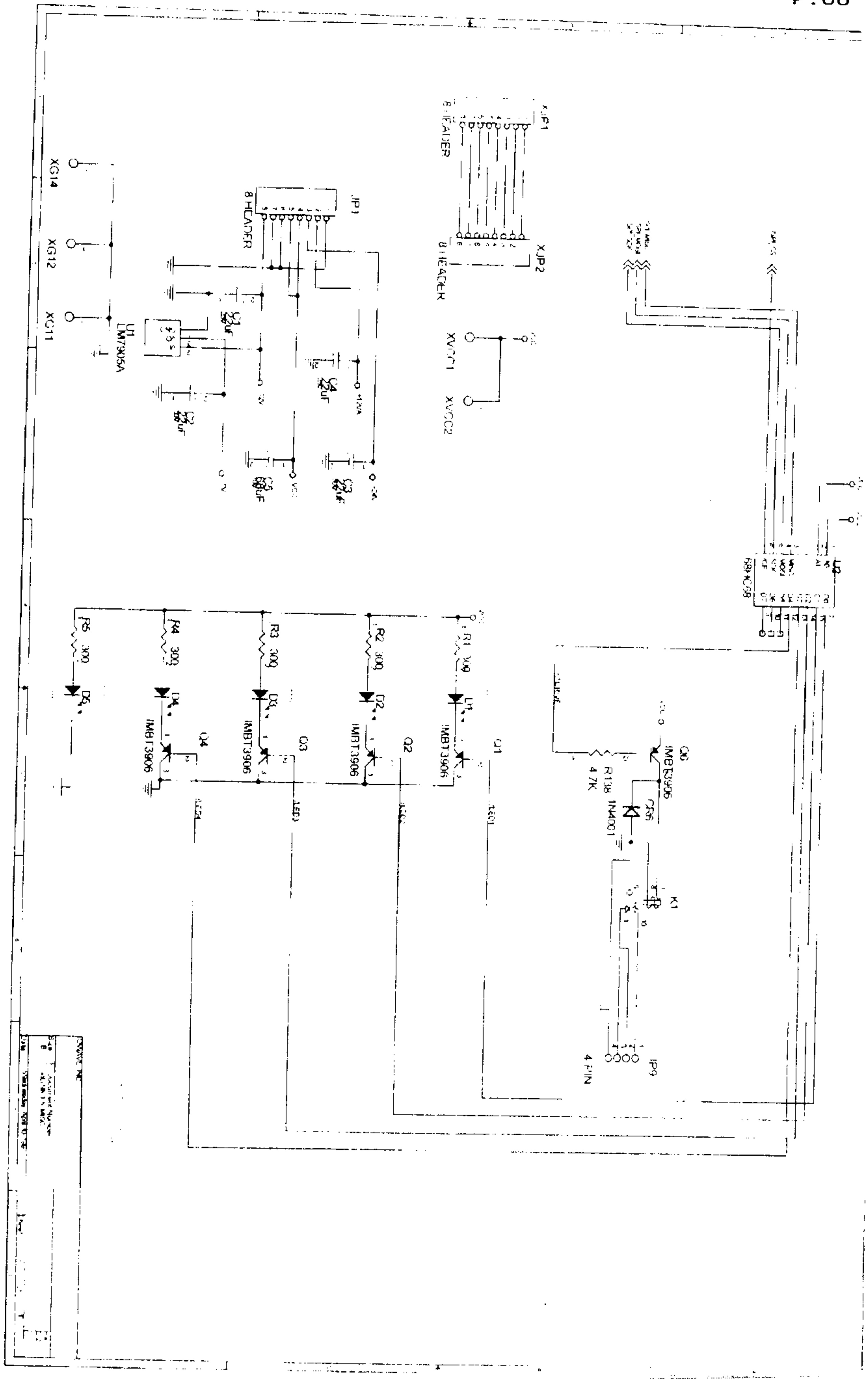
XG14
XG12
XG11
U1
LM7905A
JP1
8 HEADER
XJP1
8 HEADER
XJP2
8 HEADER
C1
C2
C3
C4
C5
XVCC1
XVCC2
U2
68HC68
R1 300
R2 300
R3 300
R4 300
R5 300
D1
D2
D3
D4
D5
Q1
Q2
Q3
Q4
IMBT3906
IMBT3906
IMBT3906
IMBT3906
Q6
IMBT3906
R138
4.7K
CR6
1N4001
K1
JP9
4 PIN

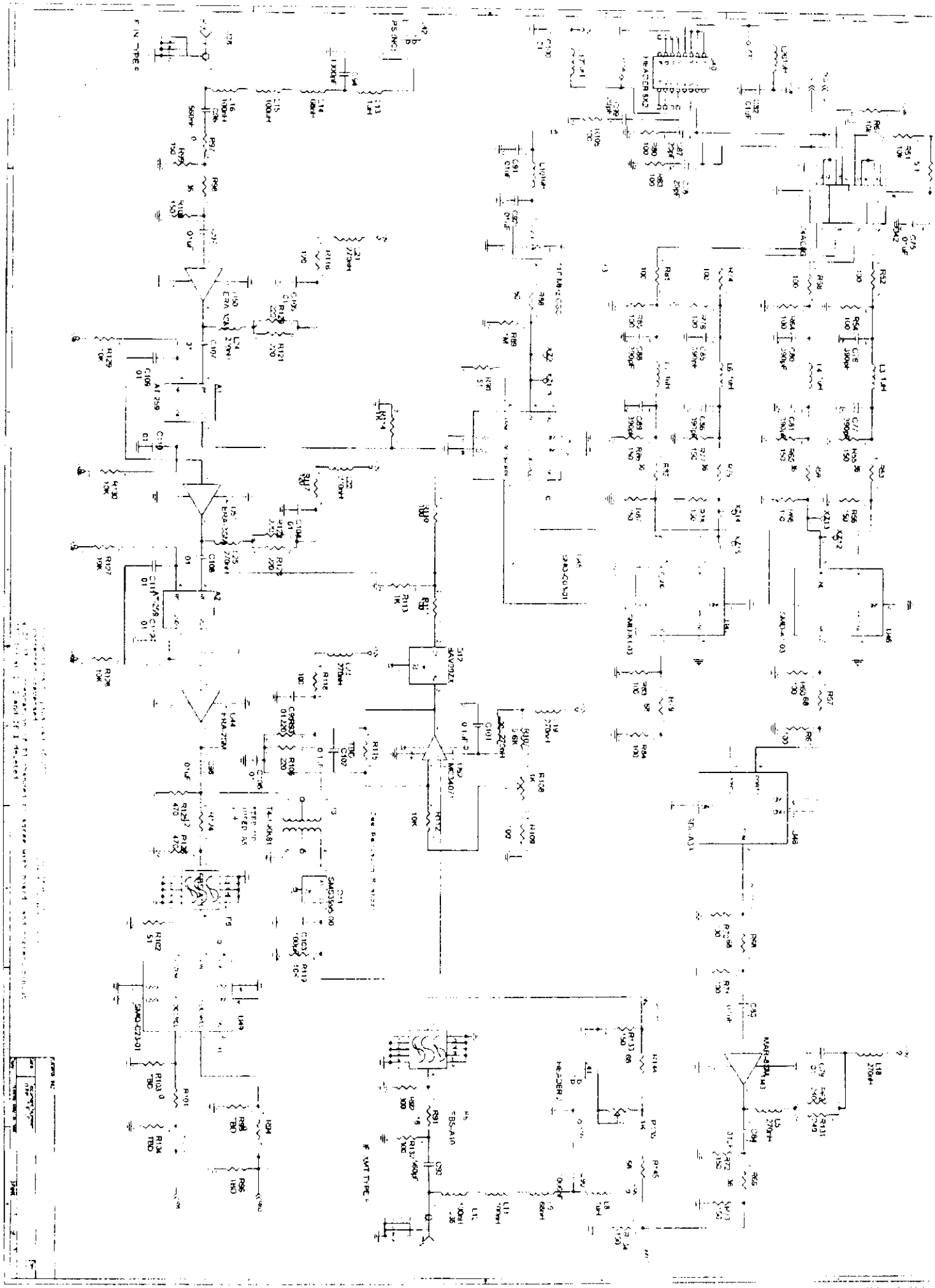

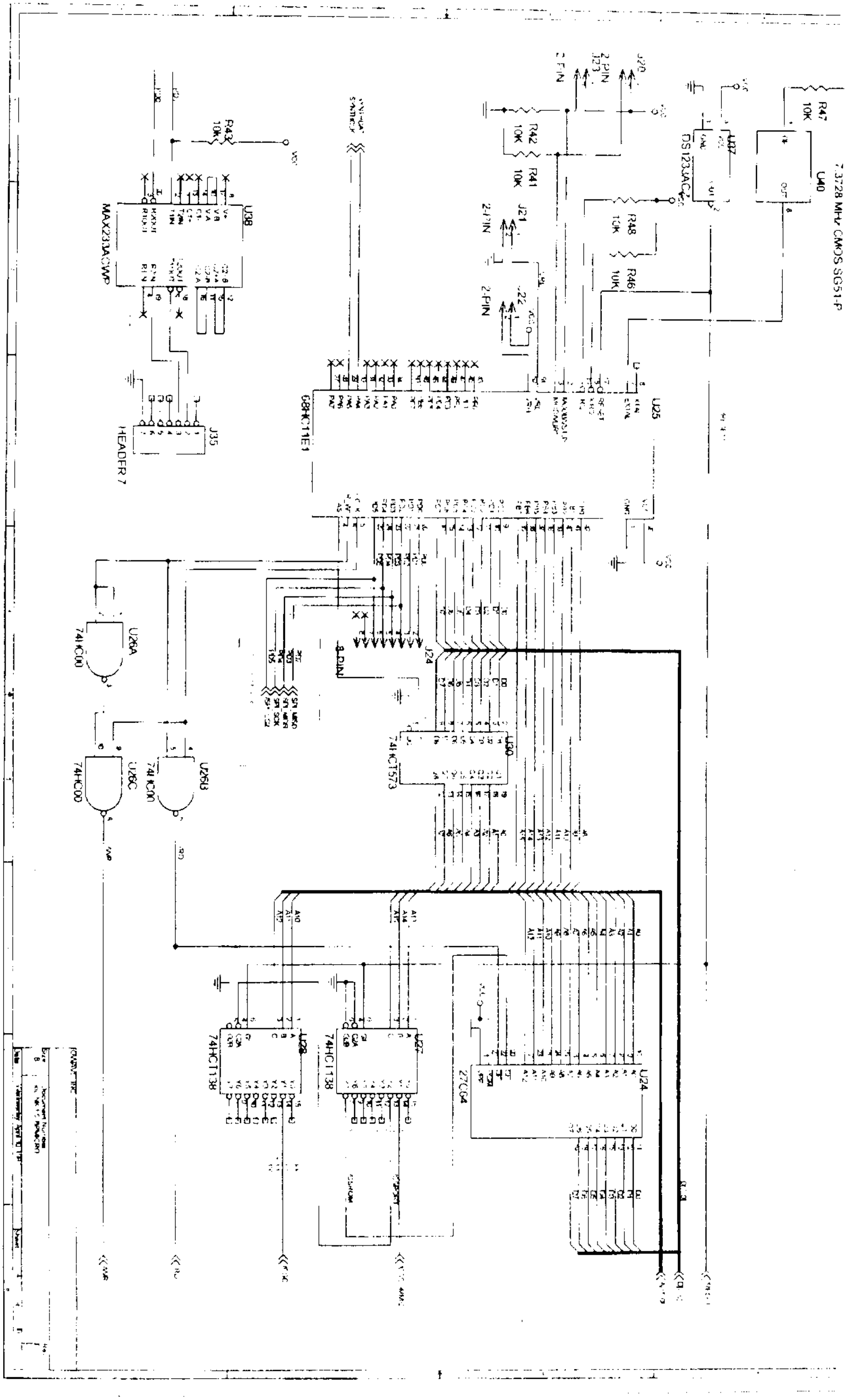
U38
MAX231ACWP
R43
10K
J35
HEADER 7
U25
68HC11E1
R42
10K
R41
10K
J20
J23
2-PIN
J21
2-PIN
J22
2-PIN
U37
DS1233AC
R48
10K
R46
10K
R47
10K
U40
7.3728 MHz CMOS SG51-P
U26A
74HC00
U26B
74HC00
U26C
74HC00
J24
8-PIN
U30
74HCT573
U24
27C64
U27
74HCT138
U28
74HCT138

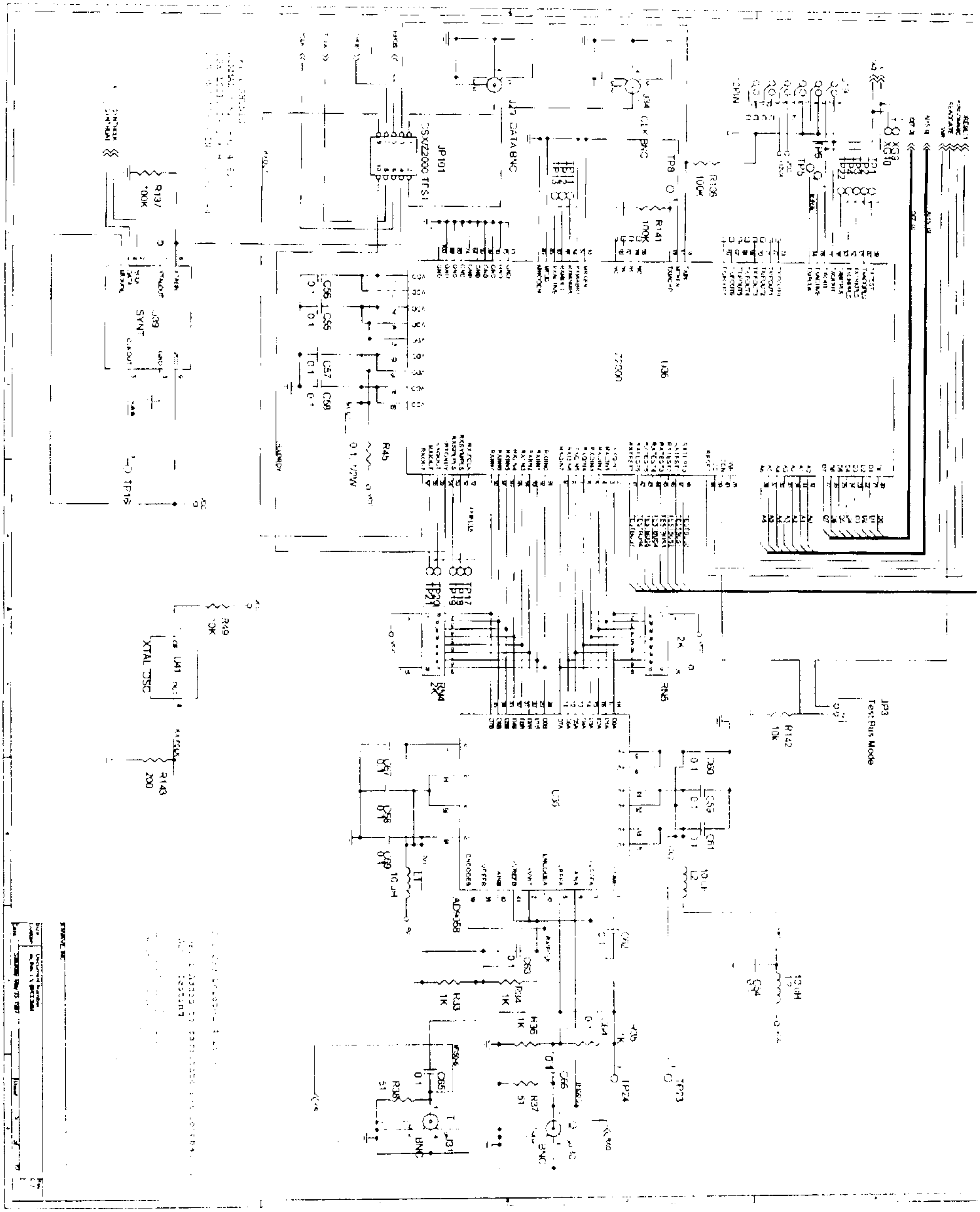
JP101
J33 DATA BNC
J34 CLK BNC
R136
100K
R141
100K
TP8
J39
SYNT
R137
100K
TP16
R45
C56
C57
C58
U36
TP17
TP19
TP21
R49
10K
U41
XTAL OSC
R143
200
RN4
RN5
JP3
Test Bus Mode
R142
10k
U35
C60
C59
C61
L1
10 uH
L2
C63
C62
R33
1K
R34
1K
R36
1K
R35
1K
C65
C66
R38
51
R37
51
J31
BNC
TP24
TP23
C64

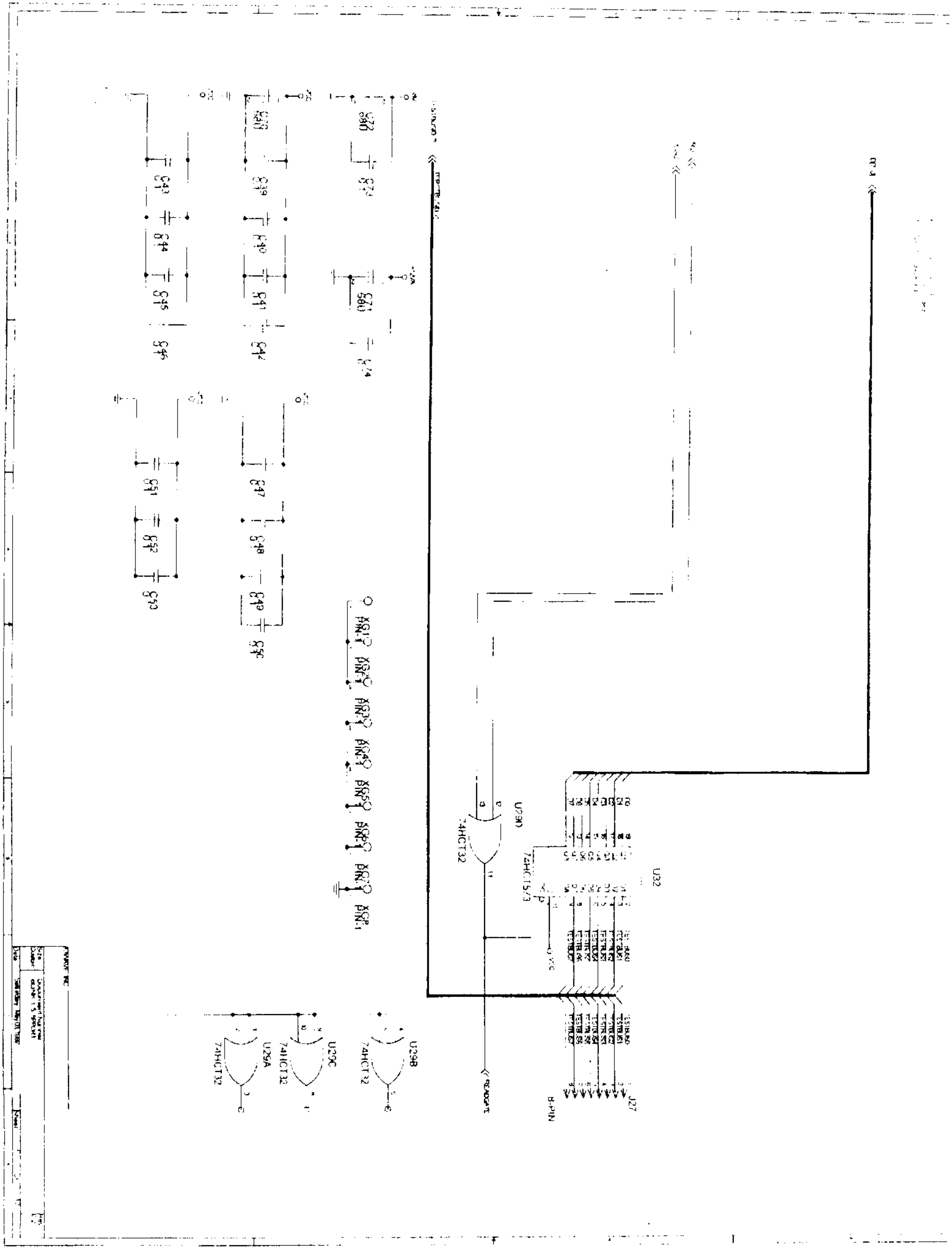
C43
C44
C45
C46
C39
C40
C41
C42
C72
680
C71
680
C74
C51
C52
C53
C47
C48
C49
C50
XG1
XG2
XG3
XG4
XG5
XG6
XG7
XGR
PIN-1
U29D
74HCT32
U32
74HC1573
U29A
U29C
U29B
74HCT32
J27
READGATE

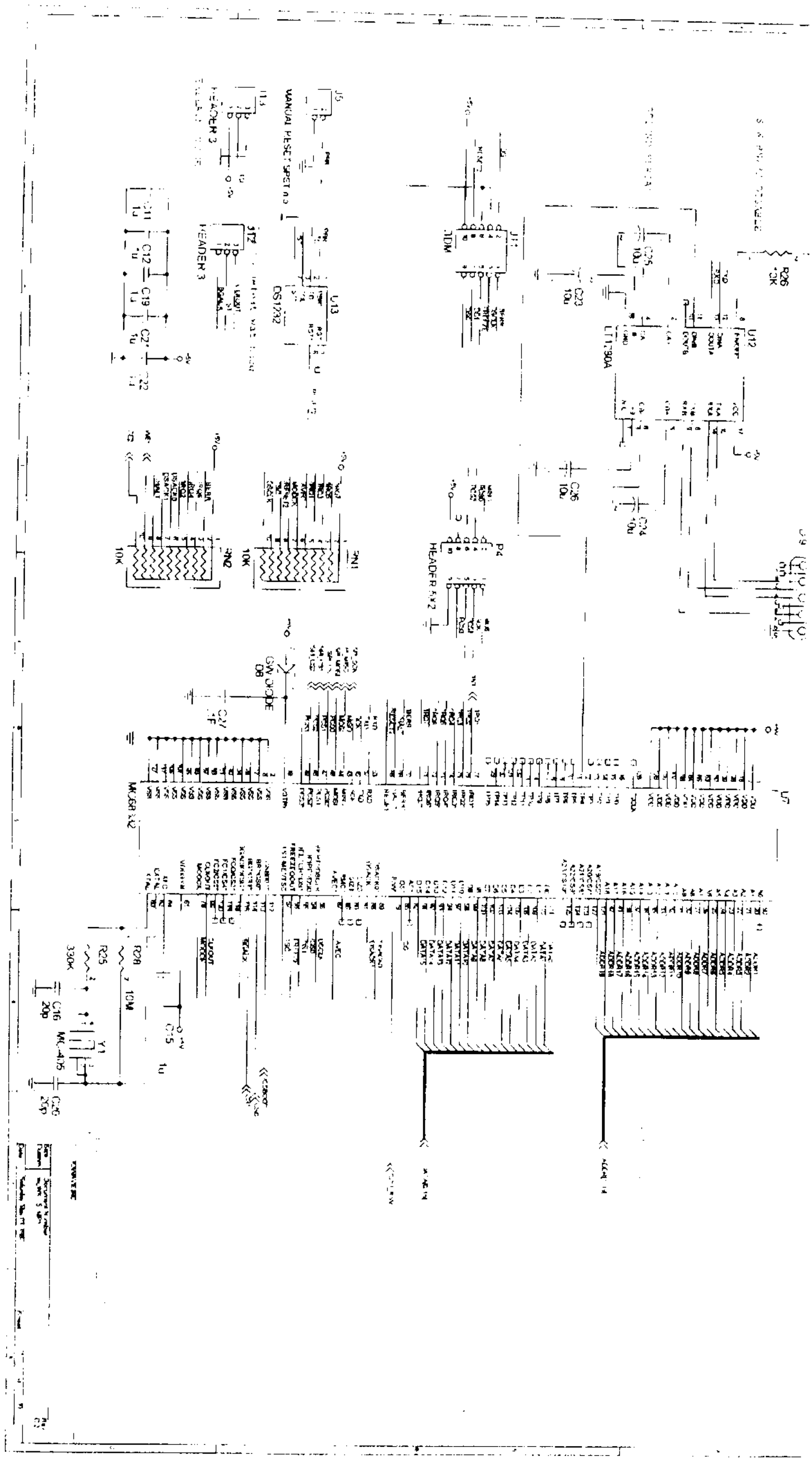
MANUAL RESET SPST n.o
HEADER 3
HEADER 3
DS1232
HEADER 4X2
10K
10K
C26
10u
R26
10K
R28
10M
R25
330K
C16
20p
C20
20p
Y1

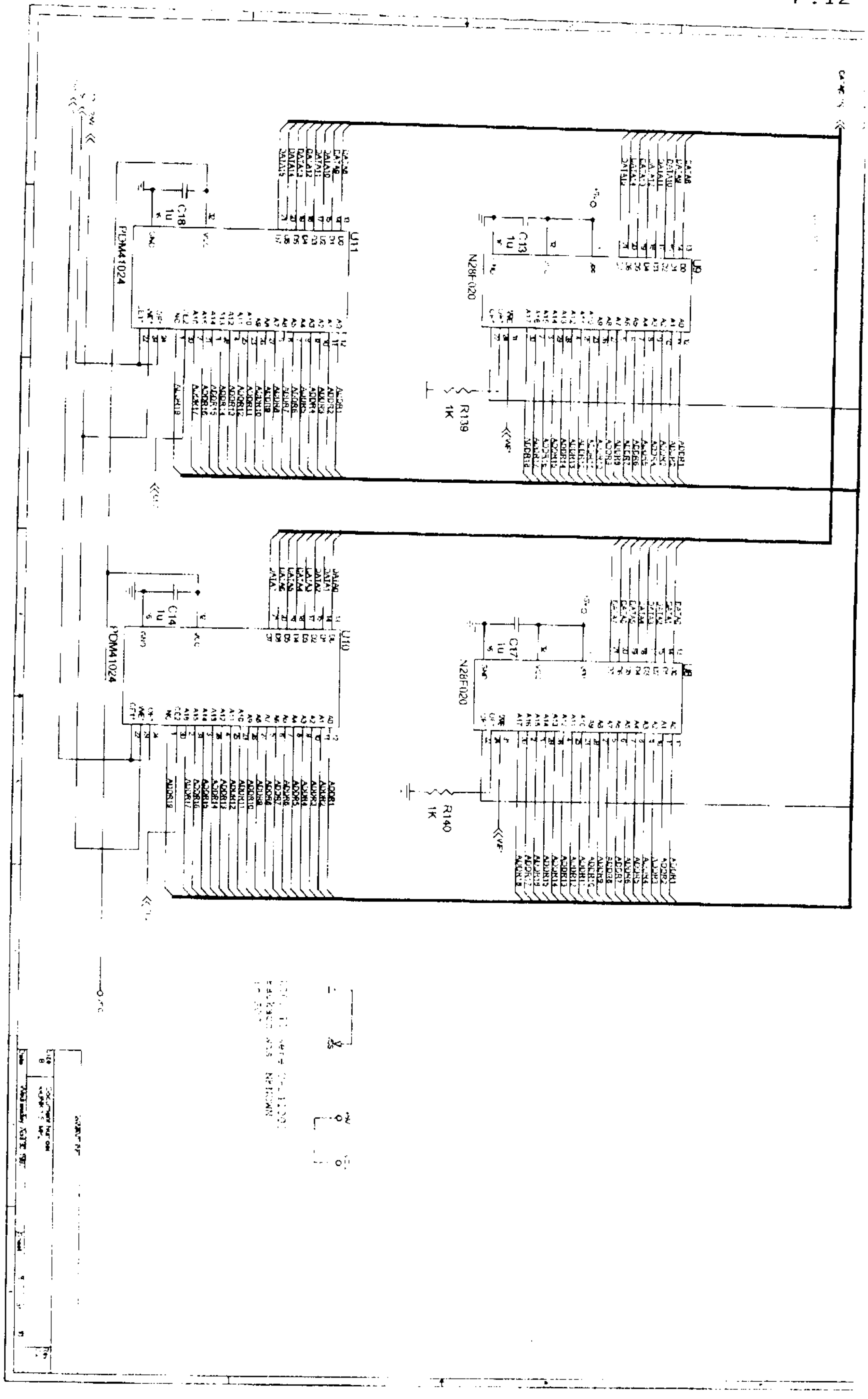
U11
PDM41024
C18
1u
U9
N28F020
C13
1u
R139
1K
U10
PDM41024
C14
1u
N28F020
C17
1u
R140
1K

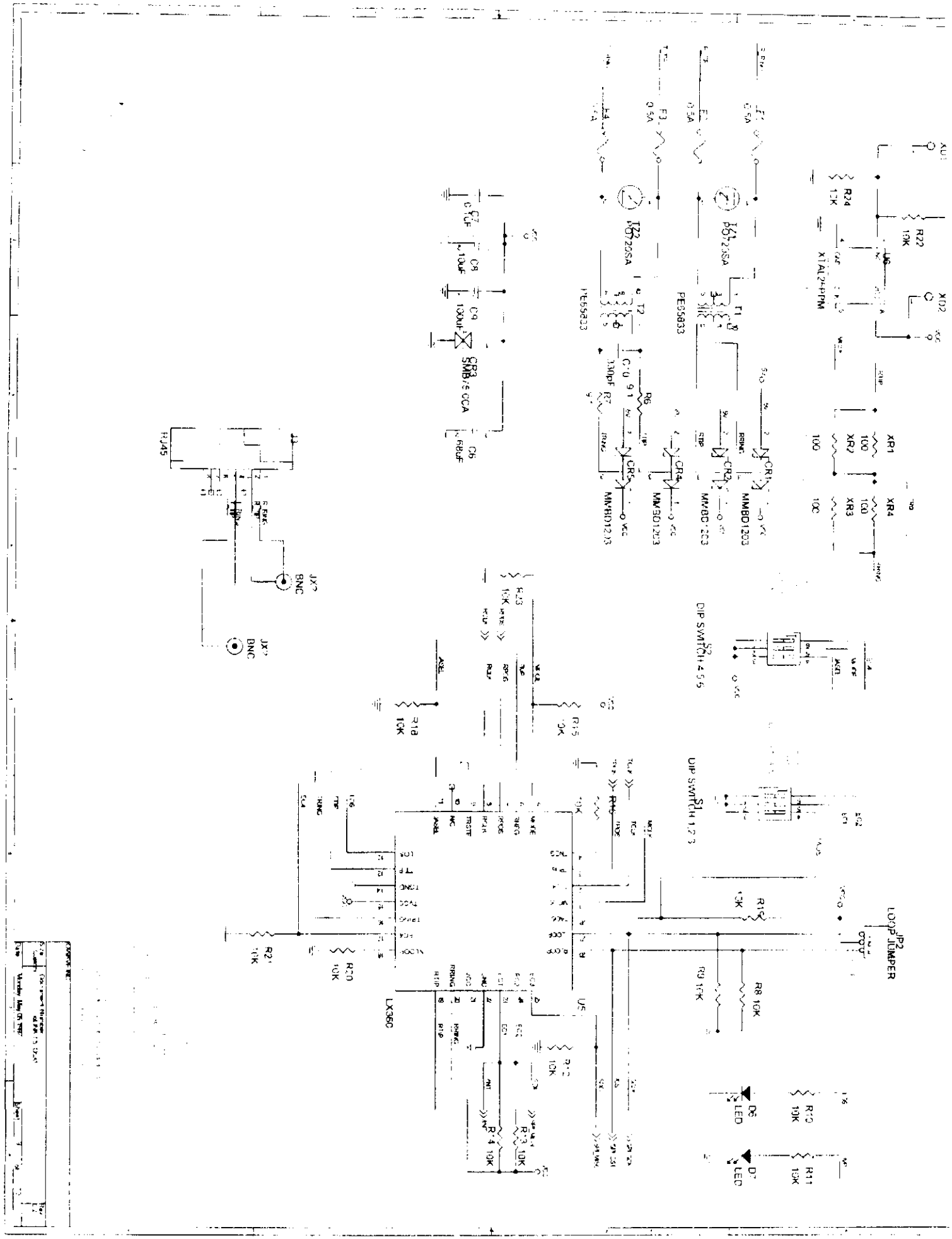
R22
10K
R24
10K
XTAL2+PPM
XR1
100
XR2
100
XR3
100
XR4
100
F1
0.5A
F2
0.5A
F3
0.5A
F4
1.5A
T1
PE65833
T2
PE65833
CR1
MMBD1203
CR2
MMBD1203
CR3
SMBJ6.0CA
CR4
MMBD1203
CR5
MMBD1203
C7
0.1uF
C8
100uF
C9
100uF
C6
68uF
C10
330pF
R6
R7
J1
RJ45
JX2
BNC
JX3
BNC
DIP SWITCH 4 5 6
DIP SWITCH 1 2 3
R15
10K
R16
10K
R18
10K
R21
10K
R20
10K
LX360
R12
10K
R14
10K
R13
10K
R8 10K
R9 10K
R10
10K
R11
10K
D6
LED
D7
LED
JP2
LOOP JUMPER

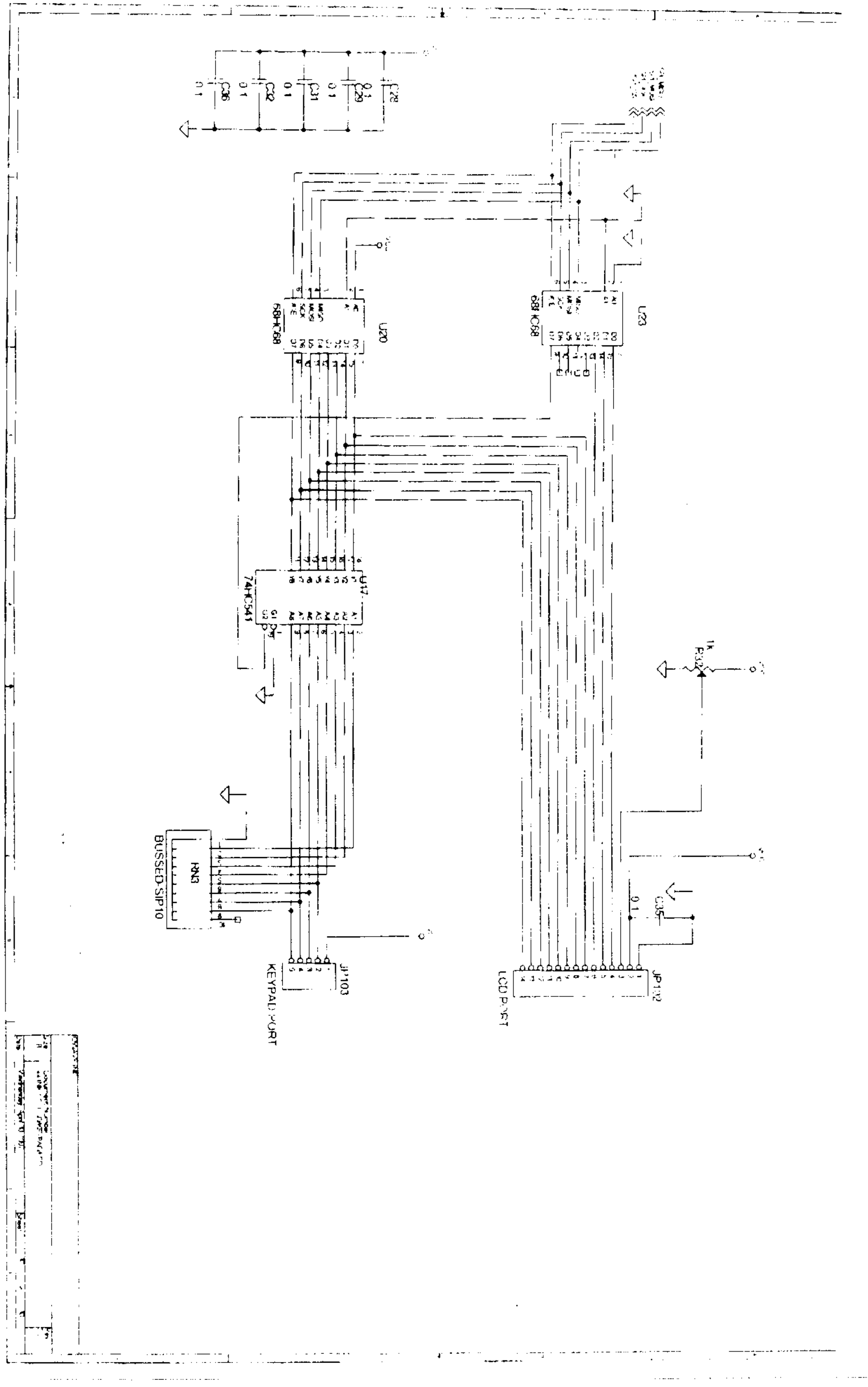
C36
C32
C31
C29
C28
U20
68HC68
U23
68HC68
U17
74HC541
R32
1K
RN3
BUSSED-SIP10
C35
JP103
KEYPAD PORT
JP102
LCD PORT

	JP303	JP304
HARDWARE MODE	PINS 1-2 PINS 5-6	PINS 5-6
SOFTWARE MODE	PINS 1-2 PINS 3-4 PINS 5-6	OPEN

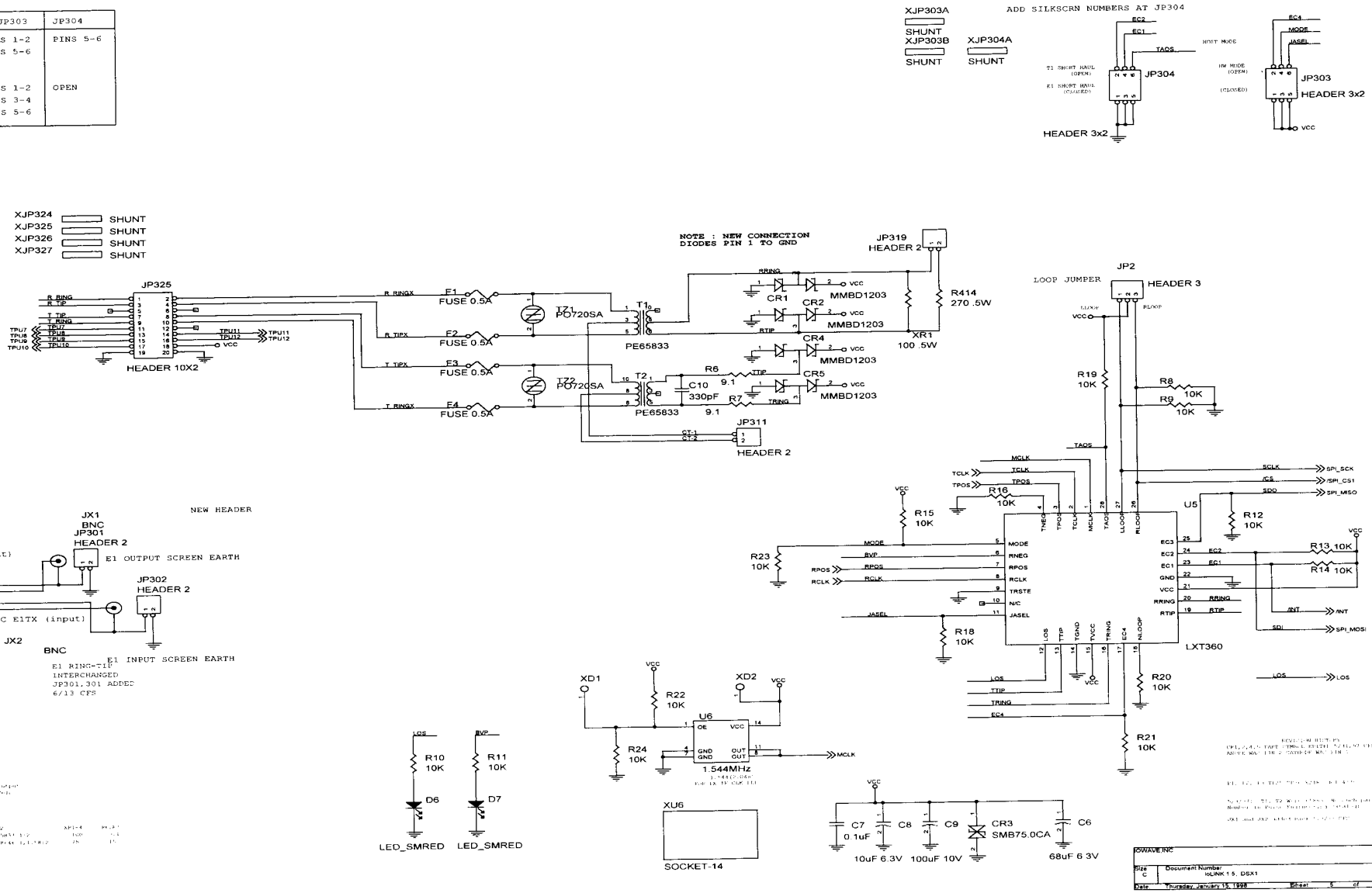

Indoor Unit

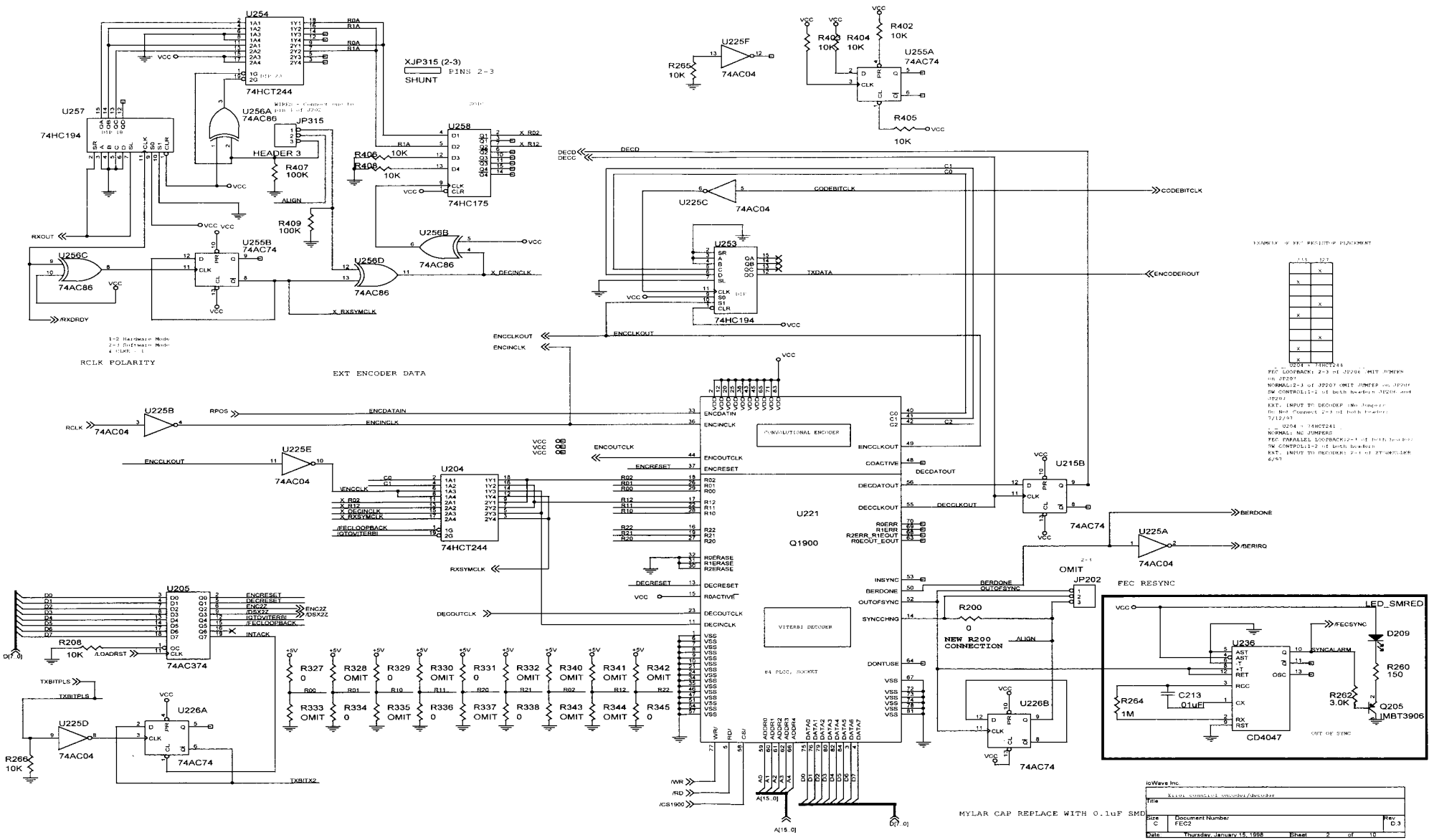
U254
74HCT244
U257
74HC194
U256A
74AC86
JP315
HEADER 3
R407
100K
R409
100K
ALIGN
RXOUT
U256C
74AC86
U255B
74AC74
/RXDRDY
RCLK POLARITY
XJP315 (2-3)
SHUNT
PINS 2-3
U258
74HC175
R406
10K
R408
10K
U256B
74AC86
X DECINCLK
U256D
74AC86
X RXSYMCLK
U225F
74AC04
R265
10K
R402
10K
R403
10K
R404
10K
U255A
74AC74
R405
10K
DECD
DECC
CODEBITCLK
U225C
74AC04
U253
74HC194
TXDATA
ENCODEROUT
ENCCLKOUT
ENCINCLK
EXT ENCODER DATA
U225B
74AC04
RCLK
RPOS
ENCDATAIN
ENCINCLK
U225E
74AC04
ENCCLKOUT
U204
74HCT244
/ENCCLK
X R02
X R12
X DECINCLK
X RXSYMCLK
/FECLOOPBACK
/QTOVITERBI
RXSYMCLK
U221
Q1900
CONVOLUTIONAL ENCODER
VITERBI DECODER
84 PLCC, SOCKET
ENCOUTCLK
ENCRESET
DECRESET
DECOUTCLK
DECINCLK
COACTIVE
DECDATOUT
DECCLKOUT
INSYNC
BERDONE
OUTOFSYNC
SYNCCHNG
DONTUSE
U215B
74AC74
U225A
74AC04
BERDONE
/BERIRQ
FEC RESYNC
OMIT
JP202
R200
0
NEW R200 CONNECTION
ALIGN
U226B
74AC74
U205
74AC374
ENCRESET
DECRESET
ENC2Z
/DSX2Z
/QTOVITERBI
/FECLOOPBACK
INTACK
R208
10K
/LOADRST
D(7..0)
TXBITPLS
U225D
74AC04
R266
10K
U226A
74AC74
TXBITX2
R327 0
R328 OMIT
R329 0
R330 OMIT
R331 0
R332 OMIT
R340 OMIT
R341 OMIT
R342 OMIT
R333 OMIT
R334 0
R335 0
R336 0
R337 OMIT
R338 0
R343 OMIT
R344 OMIT
R345 0
/WR
/RD
/CS1900
A(15..0)
D(7..0)
LED_SMRED
/FECSYNC
U236
CD4047
SYNCALARM
OUT OF SYNC
D209
R260
150
R262
3.0K
Q205
MBT3906
R264
1M
C213
.01uF
MYLAR CAP REPLACE WITH 0.1uF SMD
ioWave Inc.
Title
Size C
Document Number FEC2
Rev 0.3
Date: Thursday, January 15, 1998
Sheet 2 of 10

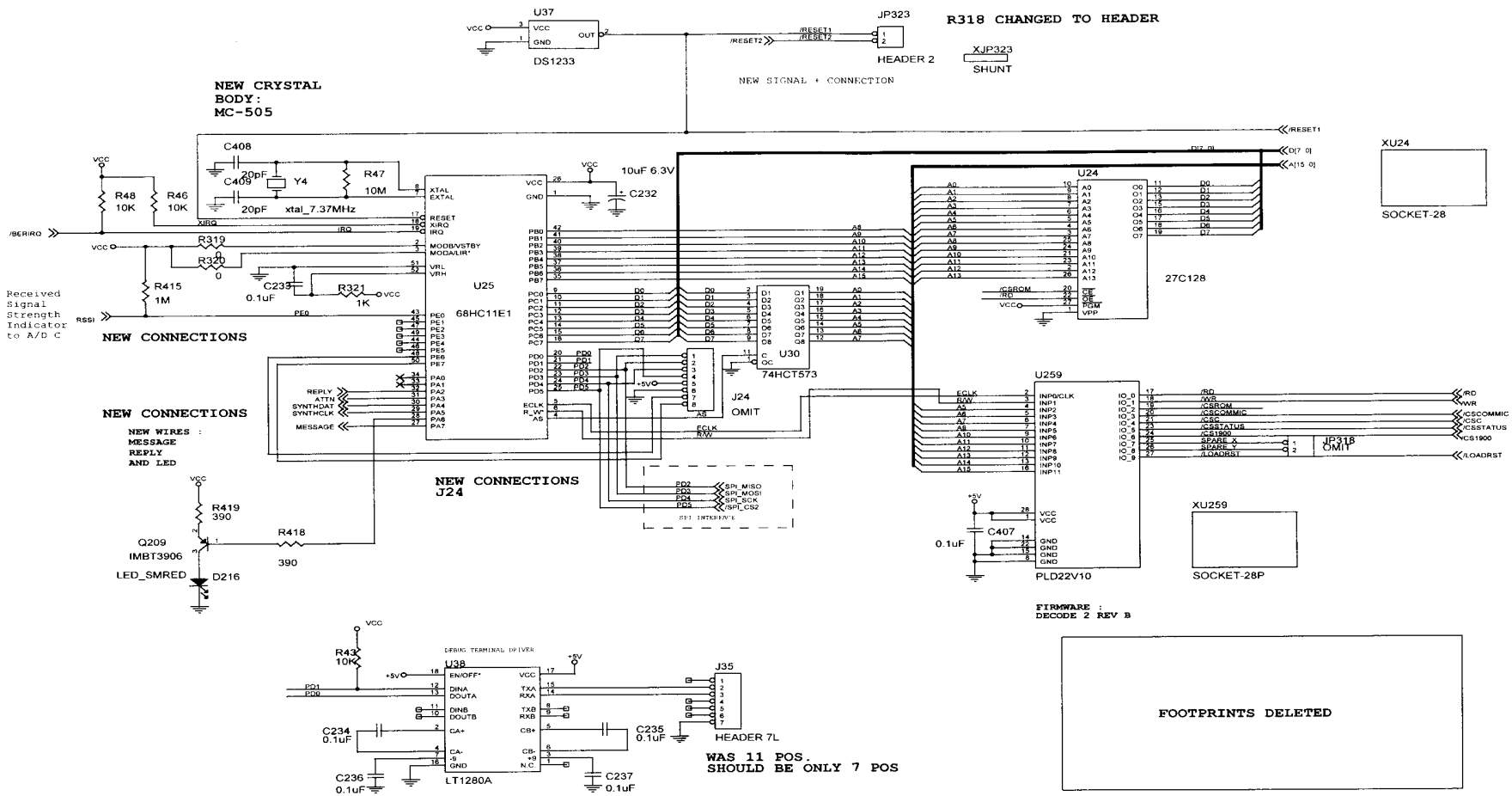

Size	Document Number	Rev
C	ioLINK 1.5 BPMICRO	D.3
Date: Thursday, January 15, 1998	Sheet 3 of 10	

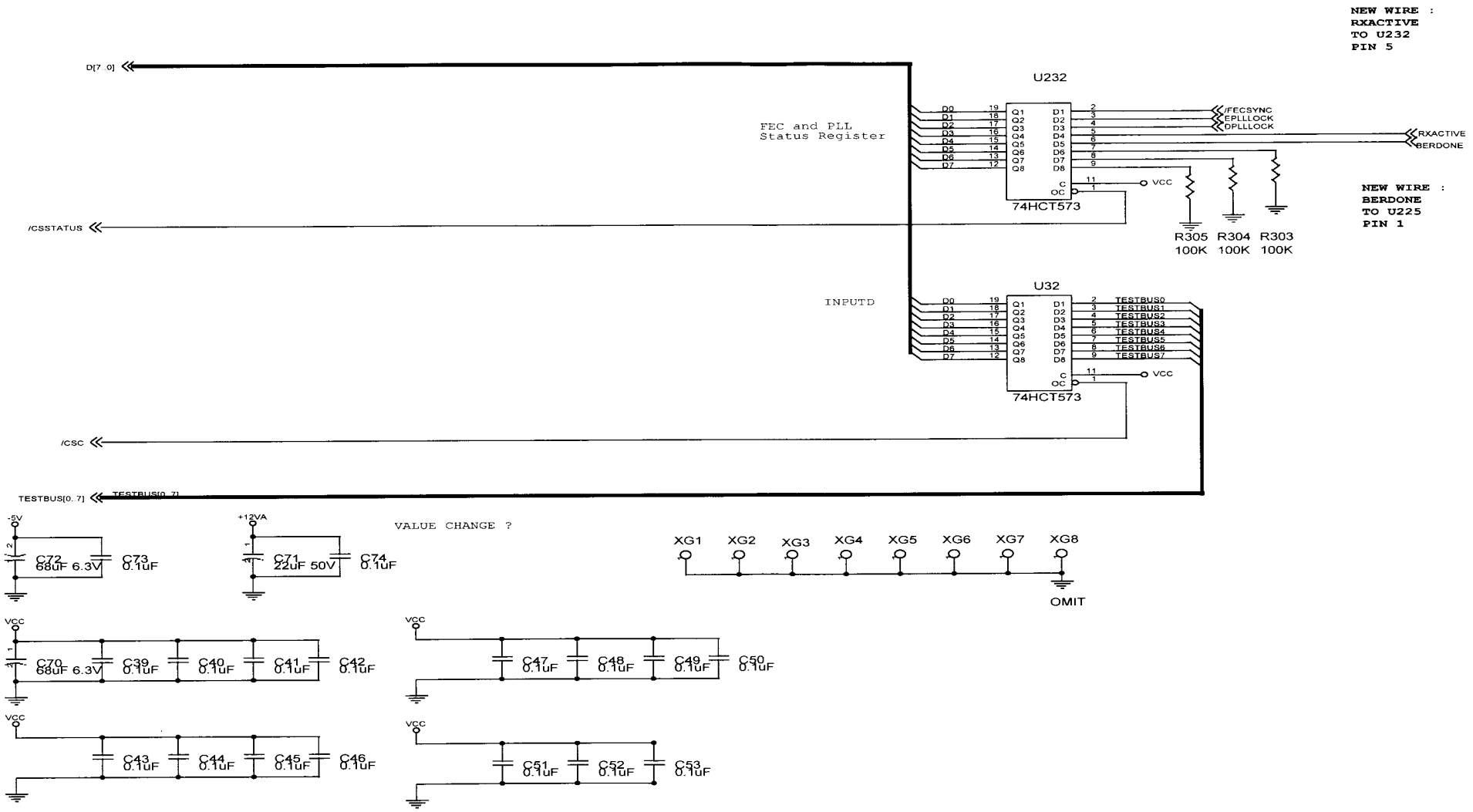

IOWAVE, INC.			
Size Custom	Document Number ioLINK 1.5, BPPORT		Rev 0.3
Date: Thursday, January 15, 1998		Sheet 4 of 10	

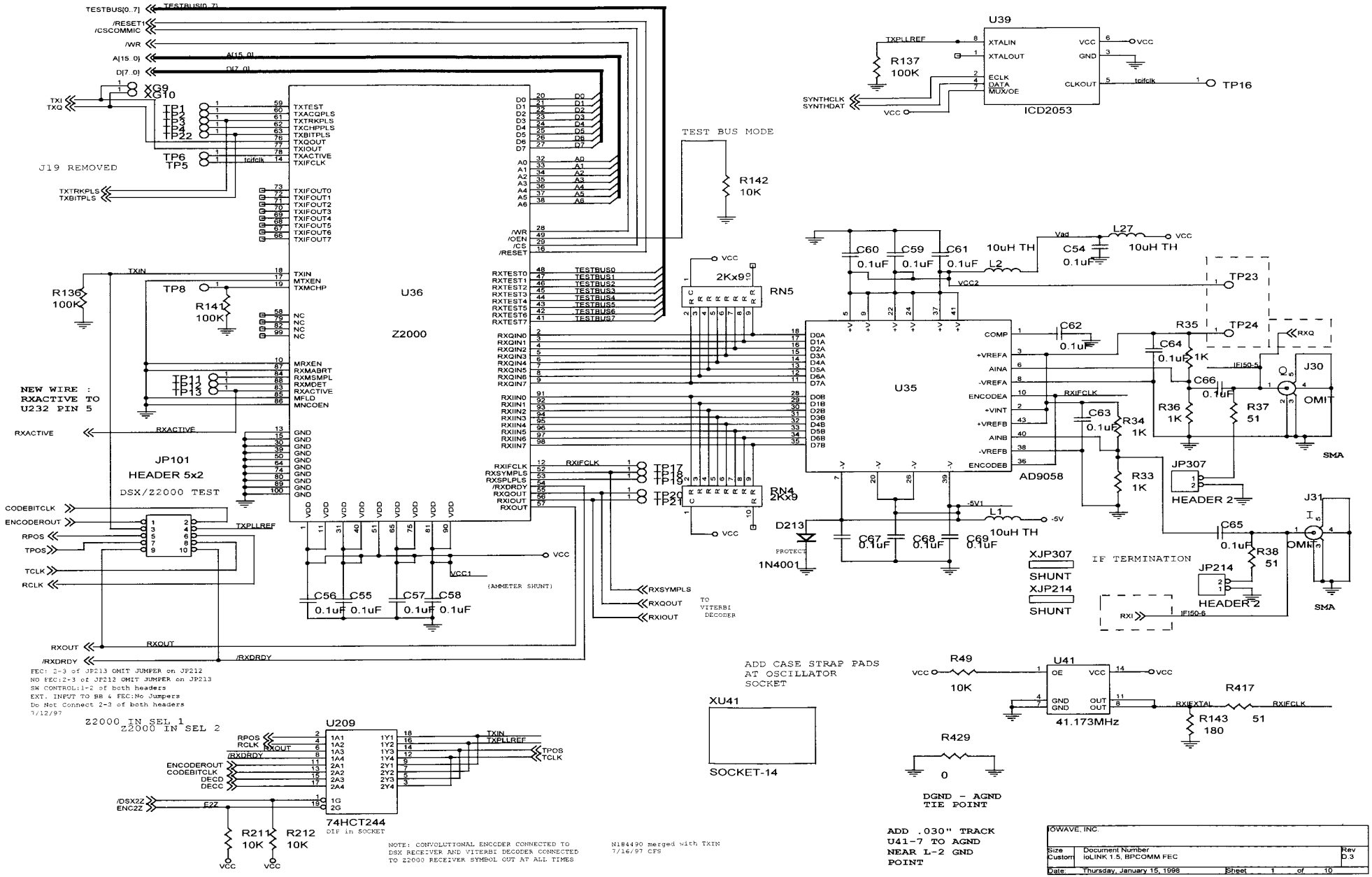
U36
Z2000
U35
AD9058
U39
ICD2053
U41
41.173MHz
U209
74HCT244
DIP in SOCKET
JP101
HEADER 5x2
DSX/Z2000 TEST
J19 REMOVED
NEW WIRE : RXACTIVE TO U232 PIN 5
TEST BUS MODE
ADD CASE STRAP PADS AT OSCILLATOR SOCKET
XU41
SOCKET-14
IF TERMINATION
DGND - AGND TIE POINT
ADD .030" TRACK U41-7 TO AGND NEAR L-2 GND POINT
FEC: 2-3 of JP213 OMIT JUMPER on JP212
NO FEC:2-3 of JP212 OMIT JUMPER on JP213
SW CONTROL:1-2 of both headers
EXT. INPUT TO BB & FEC:No Jumpers
Do Not Connect 2-3 of both headers
7/12/97
Z2000 IN SEL 1
Z2000 IN SEL 2
NOTE: CONVOLUTIONAL ENCODER CONNECTED TO DSX RECEIVER AND VITERBI DECODER CONNECTED TO Z2000 RECEIVER SYMBOL OUT AT ALL TIMES
N184490 merged with TXIN 7/16/97 CFS
IOWAVE, INC.
Size Custom
Document Number ioLINK 1.5, BPCOMM FEC
Rev 0.3
Date: Thursday, January 15, 1998
Sheet 1 of 10

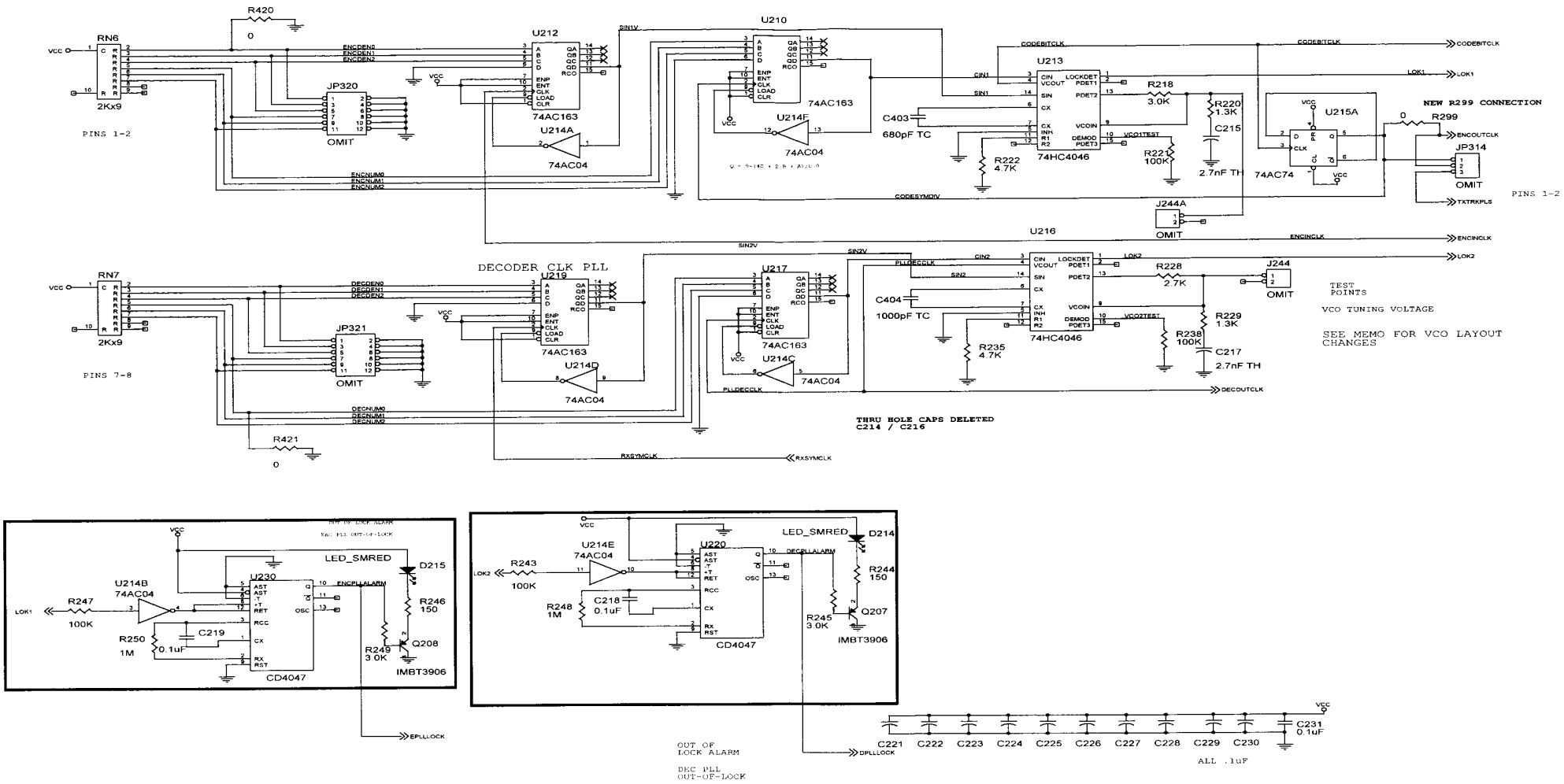

Size	Document Number	Rev
C	(Doc)	0.3
Date: Thursday, January 15, 1998	Sheet 8 of 10	

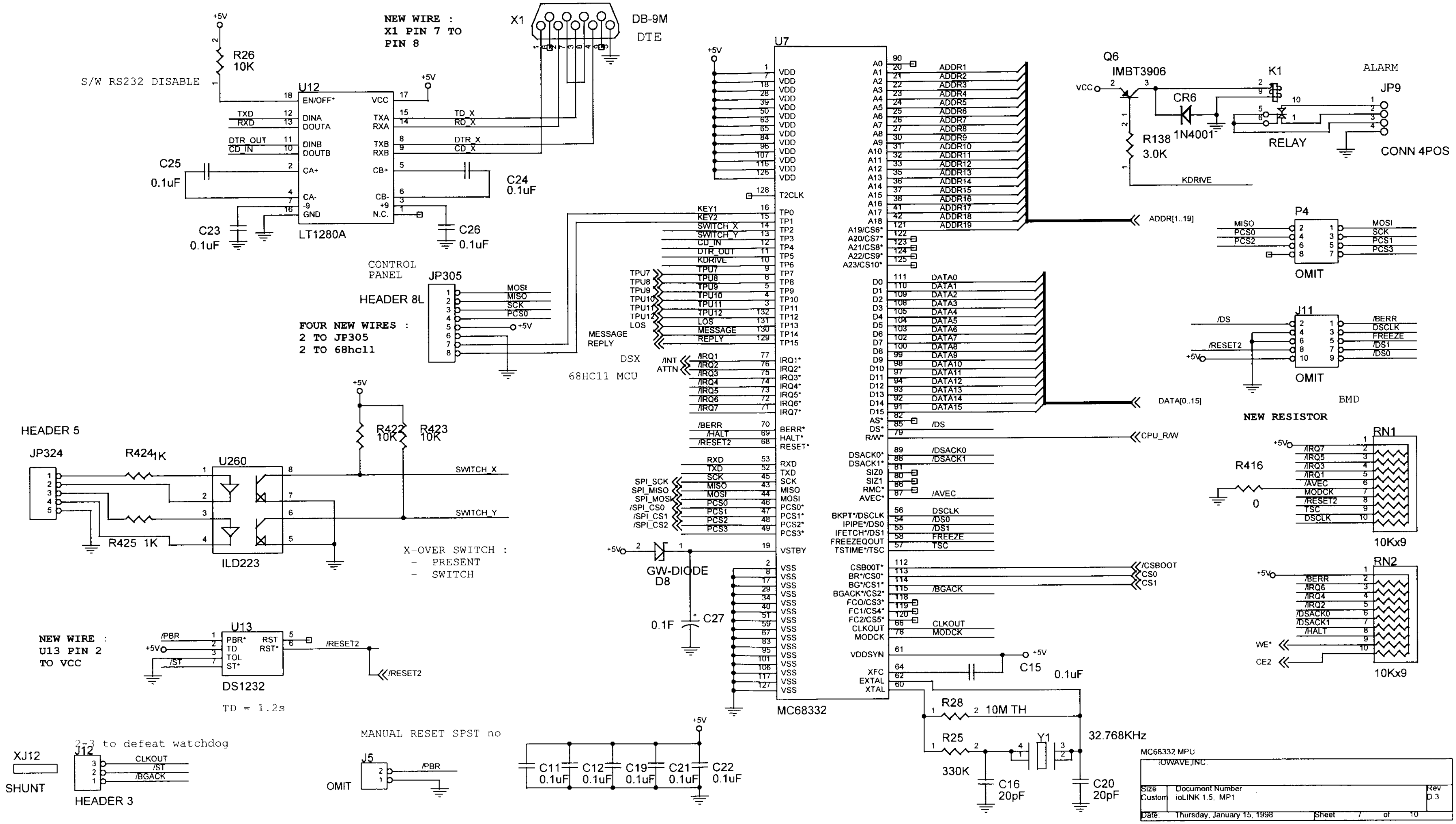
S/W RS232 DISABLE
R26 10K
U12 LT1280A
NEW WIRE : X1 PIN 7 TO PIN 8
X1 DB-9M DTE
C25 0.1uF
C23 0.1uF
C24 0.1uF
C26 0.1uF
CONTROL PANEL
JP305 HEADER 8L
FOUR NEW WIRES : 2 TO JP305 2 TO 68hc11
DSX
68HC11 MCU
MESSAGE REPLY
HEADER 5
JP324
R424 1K
R425 1K
U260 ILD223
R422 10K
R423 10K
SWITCH_X
SWITCH_Y
X-OVER SWITCH :
- PRESENT
- SWITCH
NEW WIRE : U13 PIN 2 TO VCC
U13 DS1232
TD = 1.2s
MANUAL RESET SPST no
J5 OMIT
XJ12 SHUNT
J12 HEADER 3
2-3 to defeat watchdog
U7 MC68332
GW-DIODE D8
C27 0.1F
C11 0.1uF
C12 0.1uF
C19 0.1uF
C21 0.1uF
C22 0.1uF
C15 0.1uF
R28 10M TH
R25 330K
Y1 32.768KHz
C16 20pF
C20 20pF
ADDR[1..19]
DATA[0..15]
CPU_R/W
Q6 IMBT3906
CR6 1N4001
R138 3.0K
KDRIVE
K1 RELAY
ALARM
JP9 CONN 4POS
P4 OMIT
J11 OMIT
BMD
NEW RESISTOR
R416 0
RN1 10Kx9
RN2 10Kx9
WE*
CE2
MC68332 MPU
IOWAVE,INC.
Size Custom
Document Number ioLINK 1.5, MP1
Rev D.3
Date: Thursday, January 15, 1998
Sheet 7 of 10

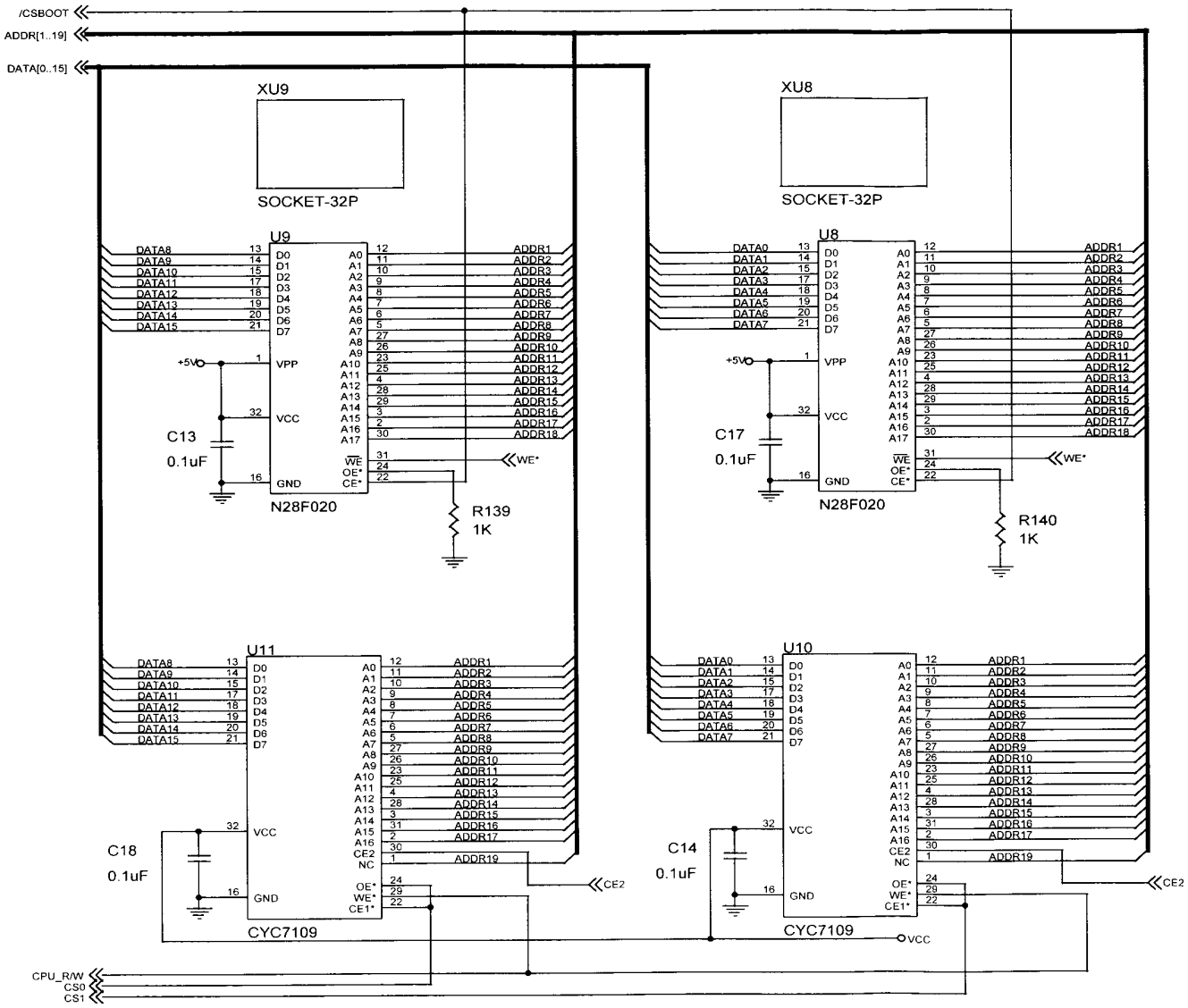

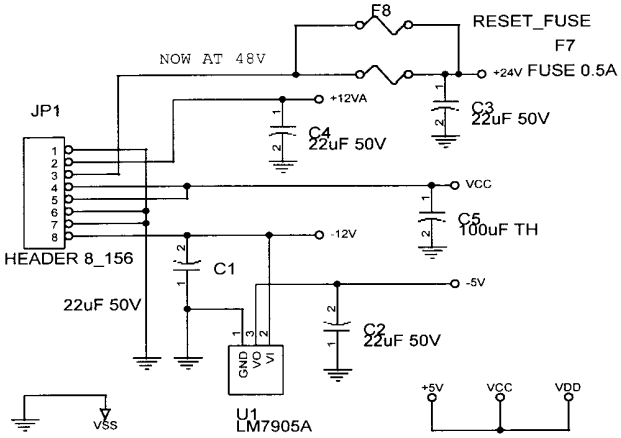

MEMORY and POWER IN

ioWAVE,INC.

Size	Document Number	Rev
B	ioLINK 1.5, MP2	D.3

Date: Thursday, January 15, 1998 Sheet 9 of 10

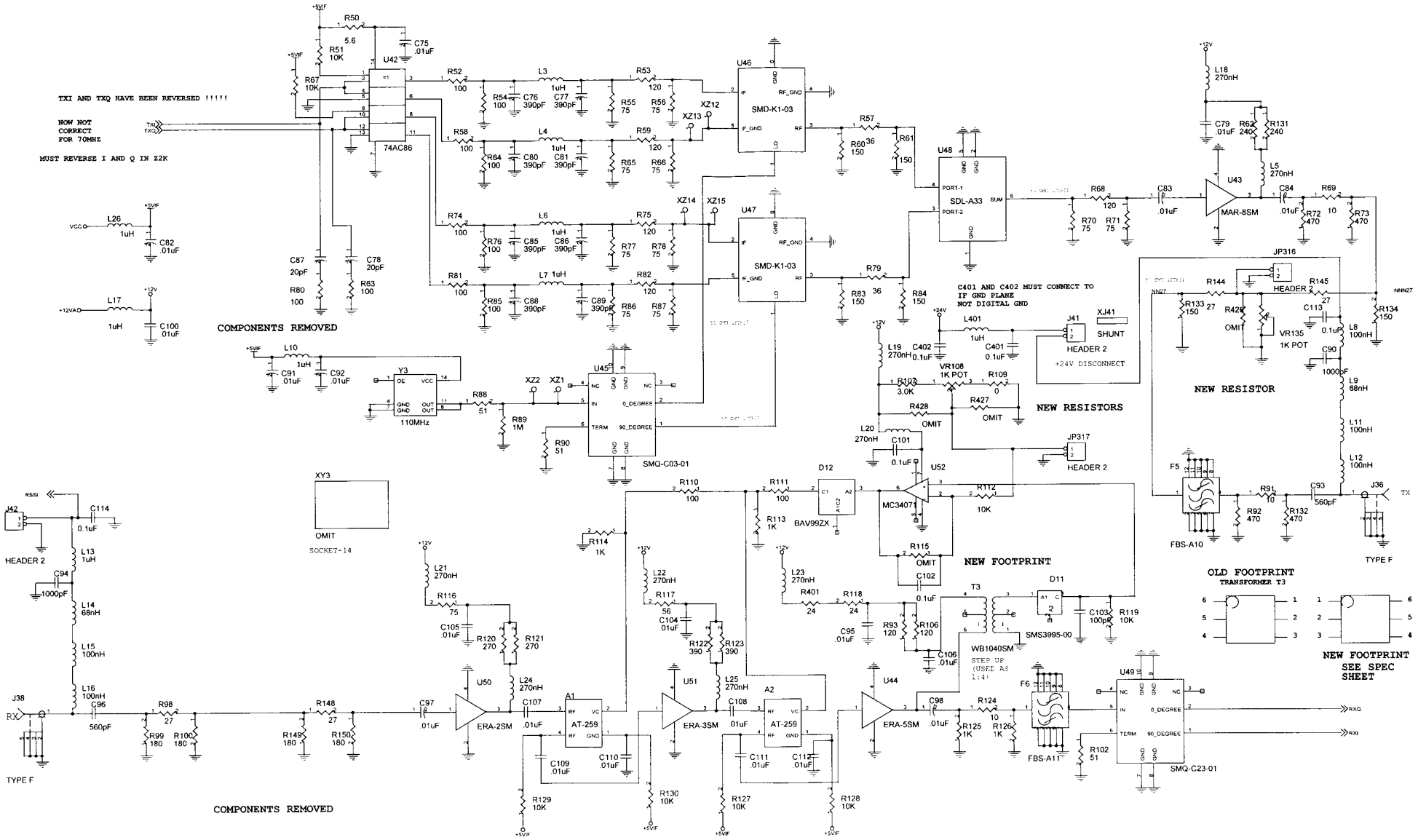
TXI AND TXQ HAVE BEEN REVERSED !!!!!
NOW NOT CORRECT FOR 70MHZ
MUST REVERSE I AND Q IN Z2K
COMPONENTS REMOVED
C401 AND C402 MUST CONNECT TO IF GND PLANE NOT DIGITAL GND
NEW RESISTORS
NEW RESISTOR
NEW FOOTPRINT
OLD FOOTPRINT
TRANSFORMER T3
NEW FOOTPRINT SEE SPEC SHEET
+24V DISCONNECT
HEADER 2
SHUNT
OMIT
SOCKET-14
110MHz
SMQ-C03-01
SMQ-C23-01
SMD-K1-03
SDL-A33
MAR-8SM
74AC86
MC34071
BAV99ZX
SMS3995-00
WB1040SM
STEP UP (USEC AS 1:4)
ERA-2SM
ERA-3SM
ERA-5SM
AT-259
FBS-A10
FBS-A11
TYPE F
RX
RXQ
RXI
TX
RSSI
VCC
+12VA
Connections to pins 263 of U52 corrected (reversed)
4/28/97: Orientation of T3 changed to agree with board (and correct pinout)
J37 J39 at TO_Q and IF_I deleted
mic osman
www.sowave.com
Title
sWave D 2
IF
Size
Document Number
Custom
F42
Rev
D 3
Date
Thursday, January 15, 1998
Sheet
6
of
10

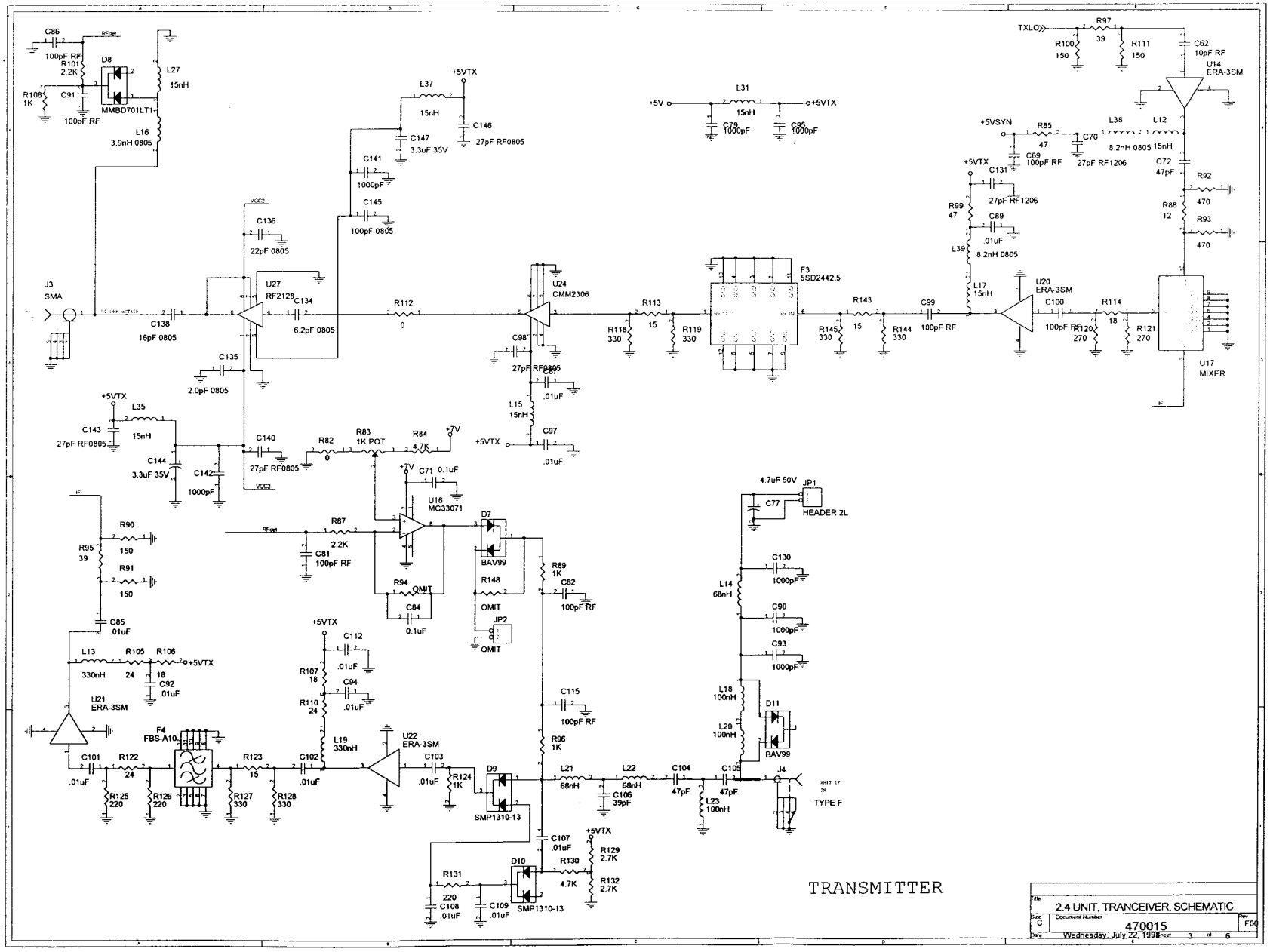
TRANSMITTER
2.4 UNIT, TRANCEIVER, SCHEMATIC
470015
Wednesday, July 22, 1998
J3 SMA
U27 RF2126
U24 CMM2306
F3 5SD2442.5
U20 ERA-3SM
U17 MIXER
U14 ERA-3SM
U16 MC33071
U21 ERA-3SM
U22 ERA-3SM
F4 FBS-A10
D8 MMBD701LT1
D7 BAV99
D9 SMP1310-13
D10 SMP1310-13
D11 BAV99
JP1 HEADER 2L
JP2 OMIT
J4 TYPE F
TXLO
+5VTX
+5VSYN
+5V
+7V

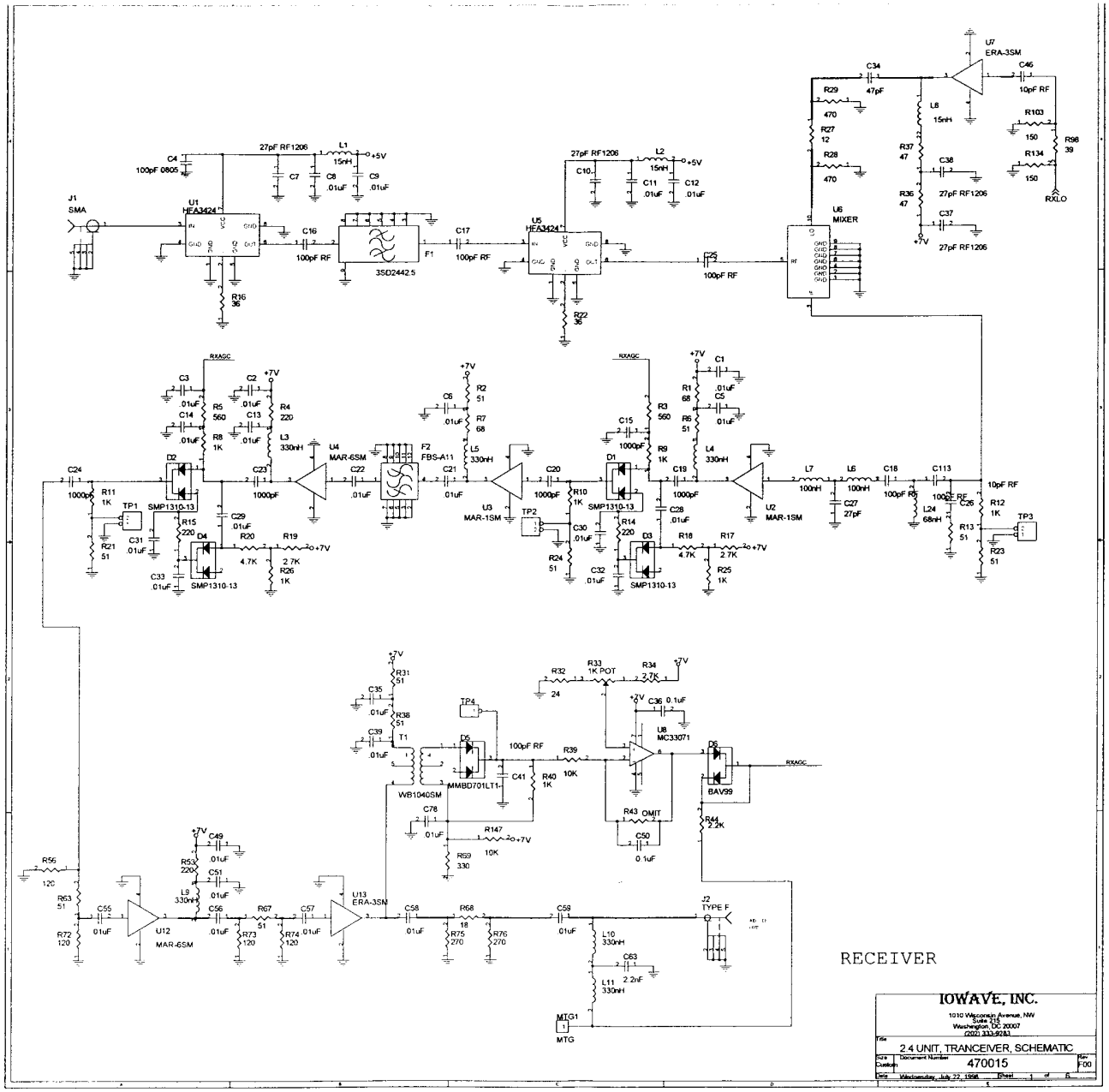
J1
SMA
U1
HFA3424
C4
100pF 0805
27pF RF1206
L1
15nH
+5V
C7
C8
.01uF
C9
.01uF
R16
36
C16
100pF RF
3SD2442.5
F1
C17
100pF RF
U5
HFA3424
C10
L2
15nH
C11
.01uF
C12
.01uF
R22
36
C25
100pF RF
U6
MIXER
U7
ERA-3SM
C34
47pF
C46
10pF RF
R29
470
R27
12
R28
470
L8
15nH
R37
47
R36
47
C38
27pF RF1206
C37
27pF RF1206
+7V
R103
150
R134
150
R98
39
RXLO
RXAGC
C3
.01uF
C14
.01uF
R5
560
R8
1K
C2
.01uF
C13
.01uF
R4
220
L3
330nH
U4
MAR-6SM
C24
1000pF
R11
1K
TP1
D2
SMP1310-13
C23
1000pF
C22
.01uF
F2
FBS-A11
C21
.01uF
C6
.01uF
R2
51
R7
68
L5
330nH
U3
MAR-1SM
TP2
C20
1000pF
R10
1K
C30
.01uF
R24
51
C15
1000pF
R3
560
R9
1K
D1
SMP1310-13
C19
1000pF
C28
.01uF
R14
220
C32
.01uF
D3
SMP1310-13
R18
4.7K
R17
2.7K
R25
1K
R1
68
R6
51
C1
.01uF
C5
.01uF
L4
330nH
U2
MAR-1SM
L7
100nH
L6
100nH
C18
100pF RF
C113
100pF RF
C26
10pF RF
R12
1K
R13
51
TP3
R23
51
L24
68nH
C27
27pF
R21
51
C31
.01uF
C33
.01uF
R15
220
C29
.01uF
D4
SMP1310-13
R20
4.7K
R19
2.7K
R26
1K
R31
51
C35
.01uF
R38
51
C39
.01uF
T1
WB1040SM
TP4
D5
MMBD701LT1
100pF RF
C41
R40
1K
R39
10K
R32
24
R33
1K POT
R34
2.7K
C36
0.1uF
U8
MC33071
D6
BAV99
R43
OMIT
C50
0.1uF
R44
2.2K
C78
.01uF
R147
10K
R59
330
R56
120
R63
51
C55
.01uF
R72
120
U12
MAR-6SM
C49
.01uF
R53
220
C51
.01uF
L9
330nH
C56
.01uF
R67
51
R73
120
C57
.01uF
R74
120
U13
ERA-3SM
C58
.01uF
R68
18
R75
270
R76
270
C59
.01uF
L10
330nH
C63
2.2nF
L11
330nH
J2
TYPE F
MTG1
MTG
RECEIVER
IOWAVE, INC.
1010 Wisconsin Avenue, NW
Suite 215
Washington, DC 20007
(202) 333-9763
Title
2.4 UNIT, TRANCEIVER, SCHEMATIC
Size
Document Number
470015
Rev
F00
Date
Wednesday, July 22, 1998
Sheet
1
of
8

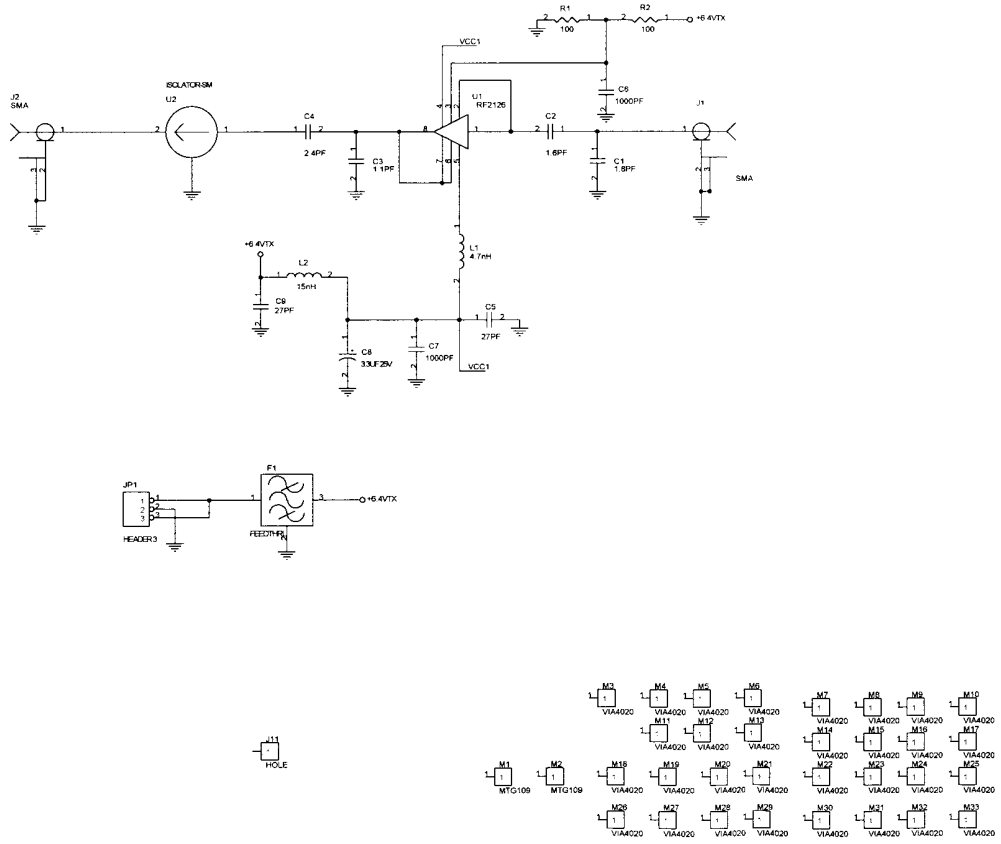

IOWave, Inc.
1010 Wisconsin Avenue, NW
Suite 215
Washington, DC 20007
(202) 333-9283

Title: Power Amp, 2.4 Ghz RF Unit

Size: C | Document Number: 470037-010 | Rev: FC2

Date: Tuesday, September 15, 1998 | Sheet 4 of 4

	JP303	JP304
HARDWARE MODE	PINS 1-2 PINS 5-6	PINS 5-6
SOFTWARE MODE	PINS 1-2 PINS 3-4 PINS 5-6	OPEN

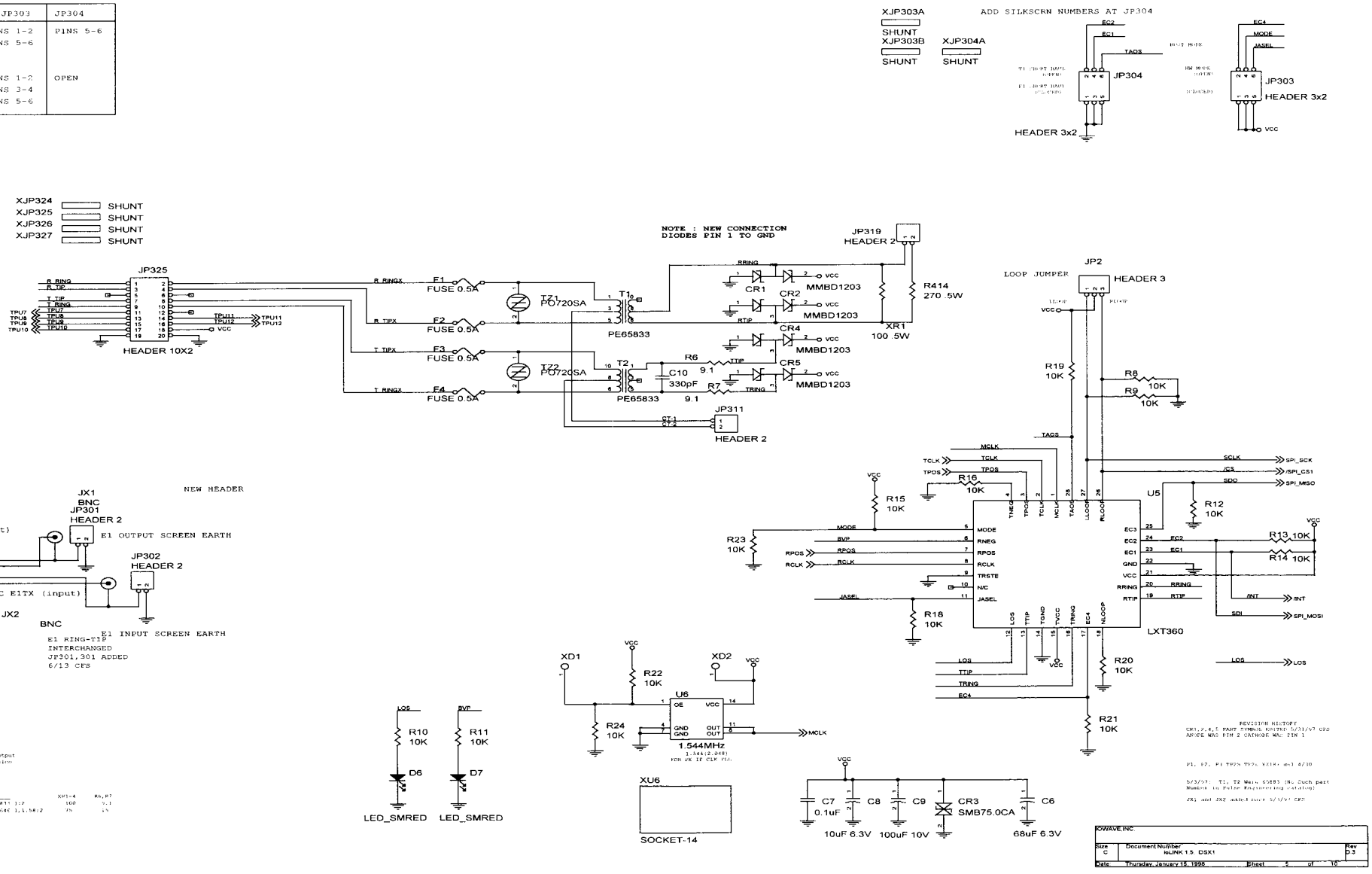

Indoor Unit