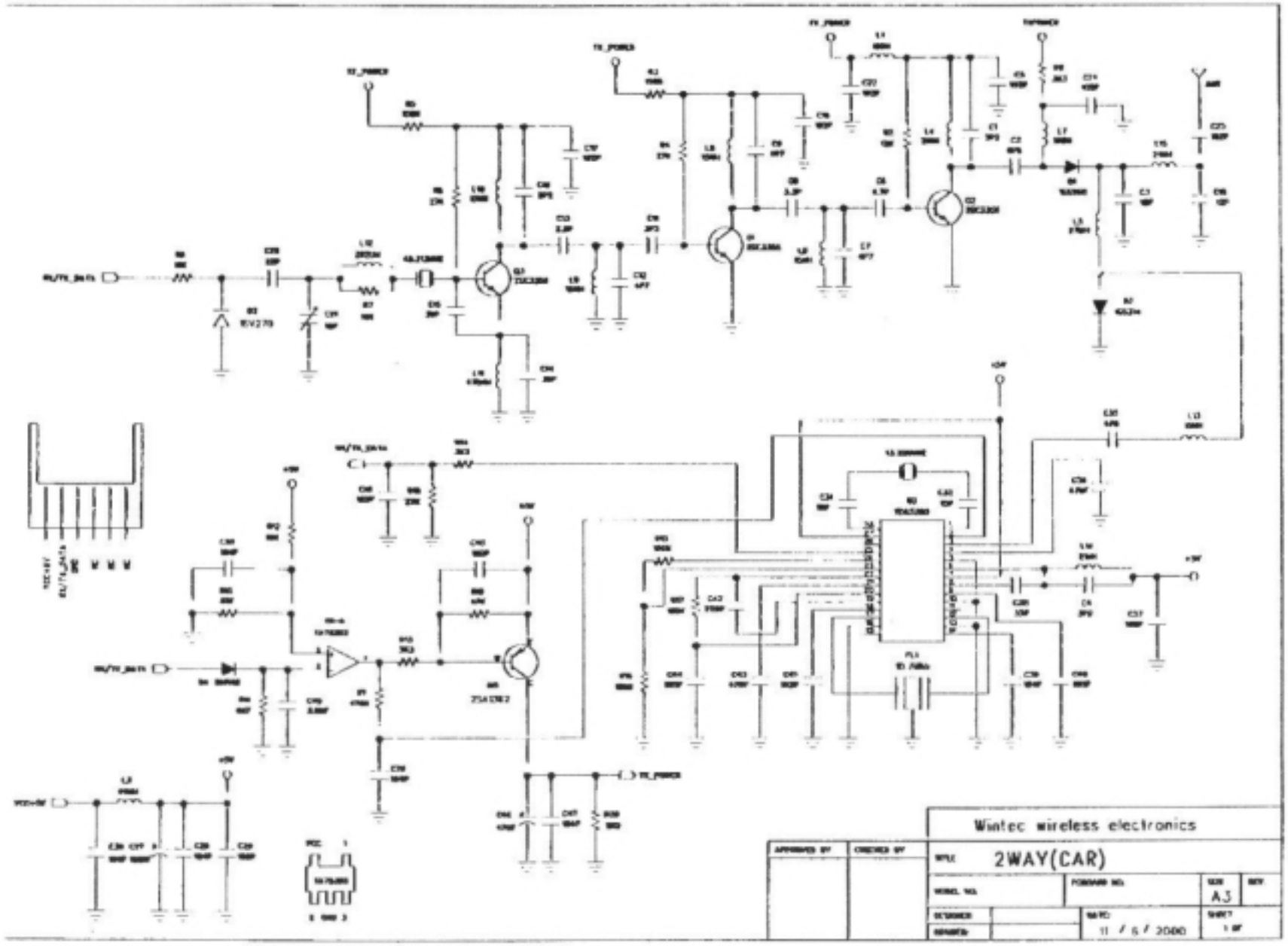
Wintec wireless electronics
2WAY(CAR)
A3
11 / 6 / 2000