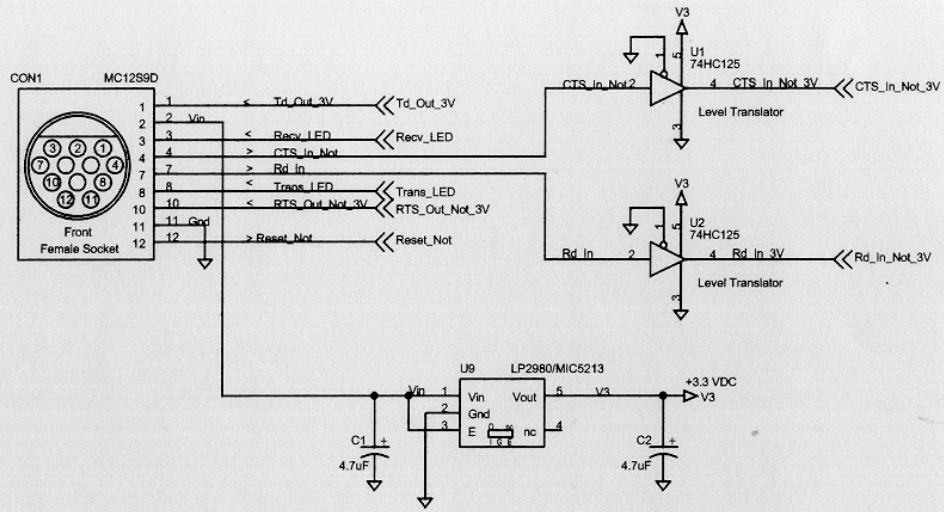

Interface

Title	**The Finger**	
Size A	Document Number 100545-000	Rev X0
Date: Friday, August 24, 2001	Sheet 1 of 3	