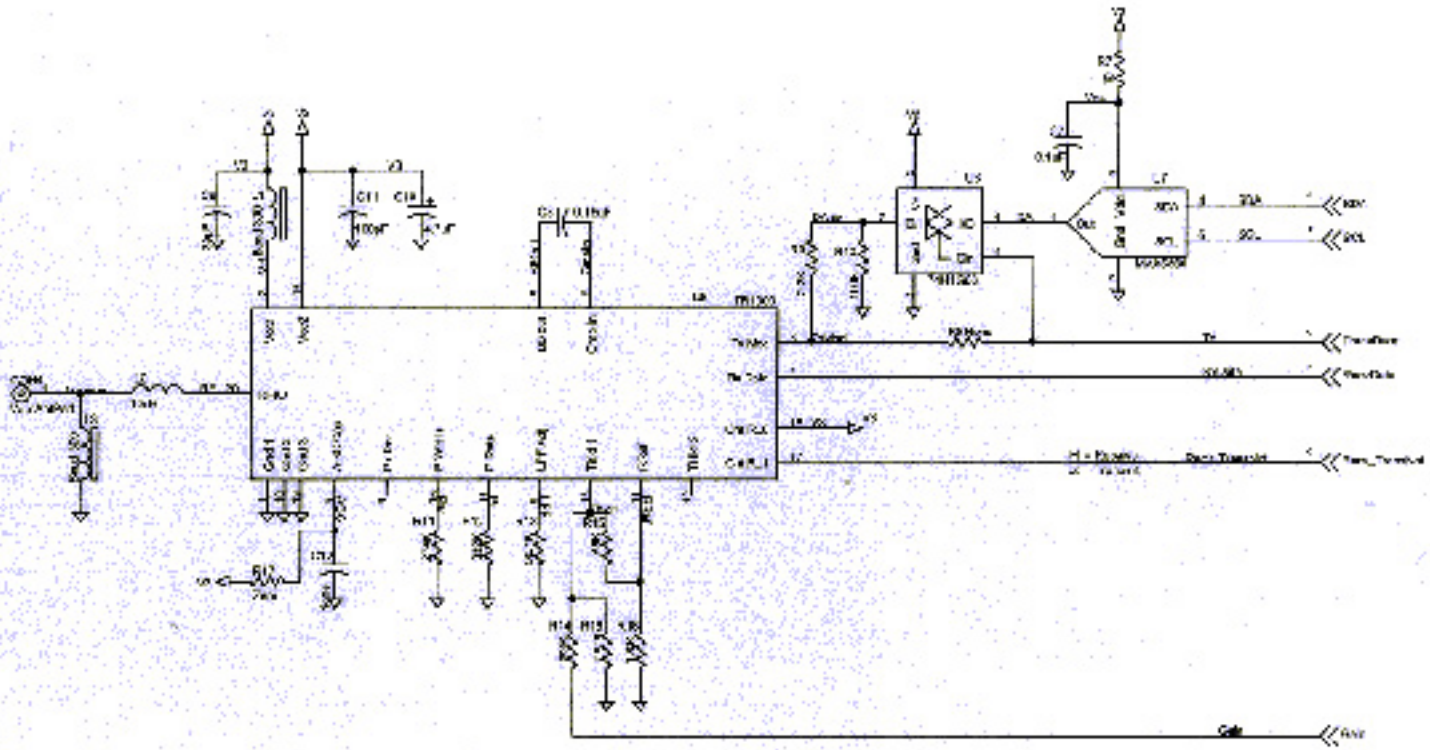

RF Transceiver

Title	The Finger
Size A	Document Number 103646 000
Rev X0	
Date	Saturday, August 04, 2007
Sheet	3 of 3