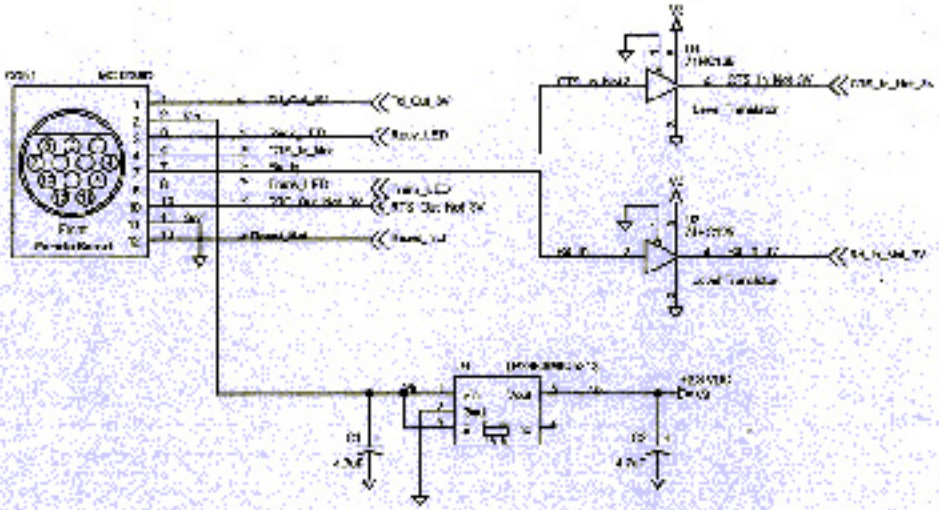

**Interface**

| | |
|---|---|
| Title | The Finger |
| Size A | Document Number 100545 000 — Rev 30 |
| Date | Friday, August 24, 2001 — Sheet 1 of 3 |