Model
ES, ET, ESBX, E4P, E4F
26W Low power factor

SCHEMATIC ELECTRONIC BALLAST

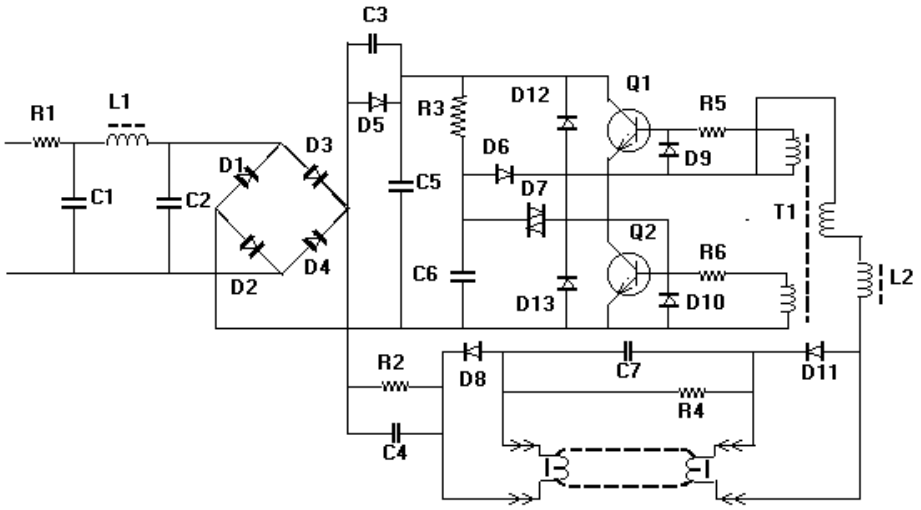

R1	.047 ohm ½ w Fuse resistor, Type RF-73B2A	D1	In4004 fast recovery diode
R2	200k ohm ¼ w carbon resistor	D2	In4004 fast recovery diode
R3	200k ohm ¼ w carbon film resistor	D3	In4004 fast recovery diode
R4	470k ohm ¼ w carbon film resistor	D4	In4004 fast recovery diode
R5	6.2 ohm ¼ w carbon film resistor	D5	none
R6	6.2 ohm ¼ w carbon film resistor	D6	In4004 fast recovery diode
C1	0.047 µF 400v polyester cap.	D7	DB3 diac
C2	0.047 µF 400v polyester cap.	D8	FR105 Fast Recovery Diode
C3	none.	D9	FR105 Fast Recovery Diode
C4	0.047 µF 400v polyester cap.	D10	FR105 Fast Recovery Diode
C5	33 µF 250v electrolytic cap.	D11	FR105 Fast Recovery Diode
C6	0.1 µF 50v monolithic ceramic cap.	D12	FR105 Fast Recovery Diode
C7	8200 PF 1kv polyester cap.	D13	FR105 Fast Recovery Diode
C8	none	L1	20 mH filter choke
C9	none	L2	.75-.76 mH inductor
		Q1	Sec 13005 transducer
		Q2	Sec 13005 transducer
		T1	3/3/3 base drive transducer