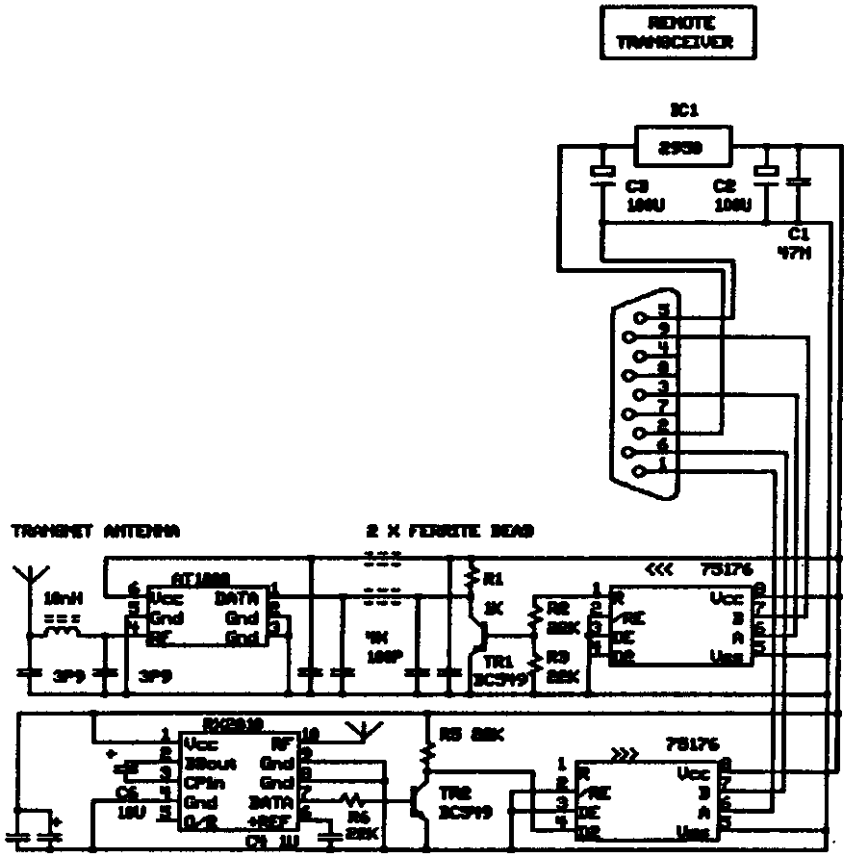

Arena Transmitter Schematic
FCC ID: NIPTRANS
Laser Chaser, LLC