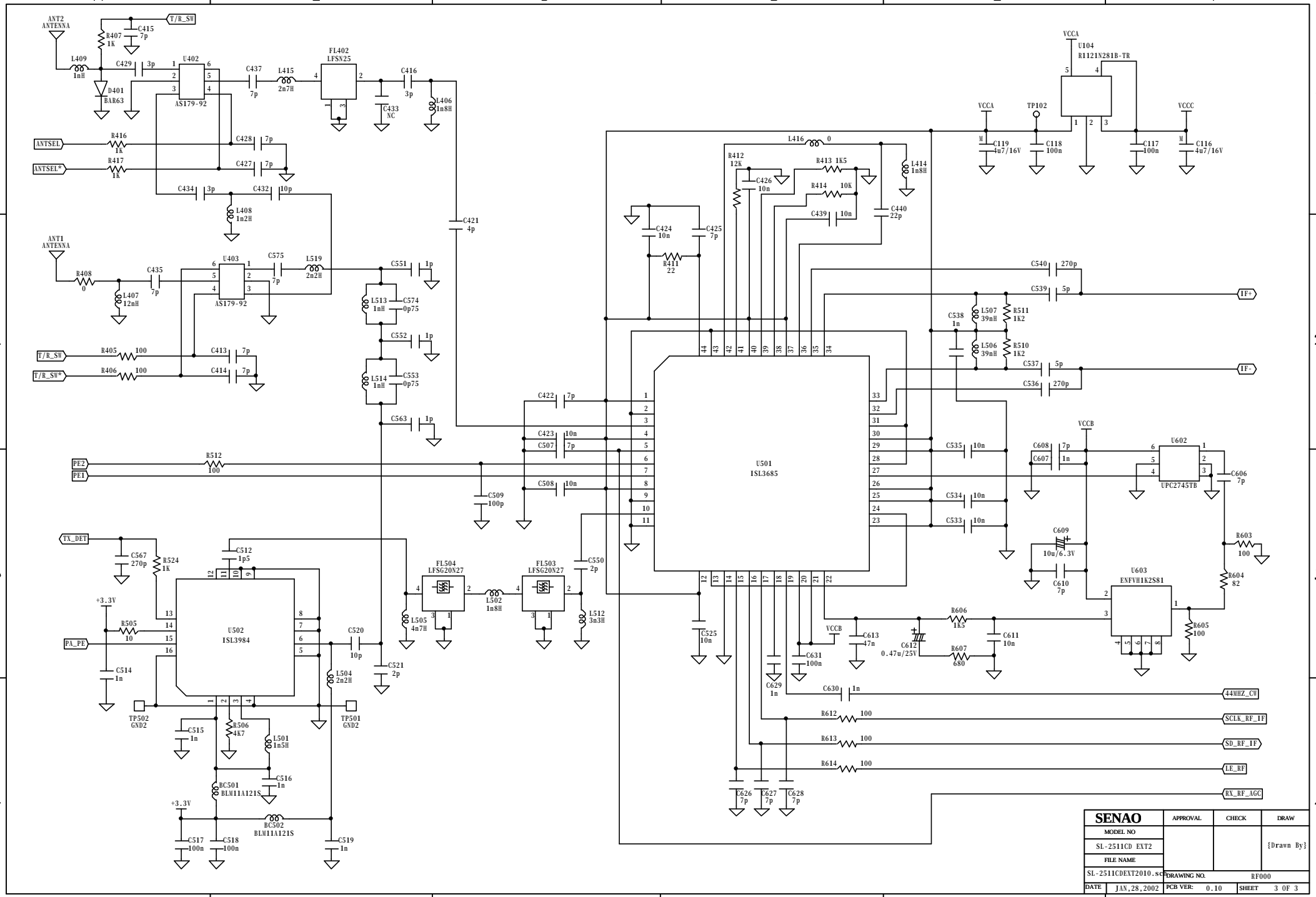
ANT2 ANTENNA
T/R_SW
R407 1K
C415 7p
L409 1nH
C429 3p
U402
AS179-92
D401 BAR63
C437 7p
L415 2n7H
FL402 LFSN25
C416 3p
C433 NC
L406 1n8H
ANTSEL
R416 1K
ANTSEL*
R417 1K
C428 7p
C427 7p
C434 3p
C432 10p
L408 1n2H
C421 4p
ANT1 ANTENNA
R408 0
C435 7p
L407 12nH
U403
AS179-92
C575 7p
L519 2n2H
C551 1p
L513 1nH
C574 0p75
C552 1p
L514 1nH
C553 0p75
C563 1p
T/R_SW
R405 100
T/R_SW*
R406 100
C413 7p
C414 7p
PE2
PE1
R512 100
C509 100p
TX_DET
C567 270p
R524 1K
C512 1p5
U502
ISL3984
+3.3V
R505 10
PA_PE
C514 1n
C520 10p
C521 2p
L504 2n2H
TP502 GND2
TP501 GND2
C515 1n
R506 4K7
L501 1n5H
C516 1n
BC501 BLM11A121S
BC502 BLM11A121S
C517 100n
C518 100n
C519 1n
FL504 LFSG20N27
L505 4n7H
L502 1n8H
FL503 LFSG20N27
L512 3n3H
C550 2p
C422 7p
C423 10n
C507 7p
C508 10n
U501
ISL3685
C525 10n
C629 1n
C631 100n
C613 47n
C612 0.47u/25V
C611 10n
R606 1K5
R607 680
C630 1n
R612 100
R613 100
R614 100
C626 7p
C627 7p
C628 7p
VCCA
U104
R1121N281B-TR
TP102
VCCC
C119 4u7/16V
C118 100n
C117 100n
C116 4u7/16V
L416 0
R412 12K
C426 10n
R413 1K5
R414 10K
C439 10n
L414 1n8H
C440 22p
C424 10n
C425 7p
R411 22
C540 270p
C539 5p
IF+
C538 1n
L507 39nH
R511 1K2
L506 39nH
R510 1K2
C537 5p
IF-
C536 270p
VCCB
C535 10n
C534 10n
C533 10n
C608 7p
C607 1n
U602
UPC2745TB
C606 7p
C609 10u/6.3V
C610 7p
R603 100
R604 82
U603
ENFVH1K2S81
R605 100
44MHZ_CW
SCLK_RF_IF
SD_RF_IF
LE_RF
RX_RF_AGC
SENAO
MODEL NO
SL-2511CD EXT2
FILE NAME
SL-2511CDEXT2010.sc
APPROVAL
CHECK
DRAW
{Drawn By}
DRAWING NO.
RF000
DATE
JAN,28,2002
PCB VER:
0.10
SHEET
3 OF 3