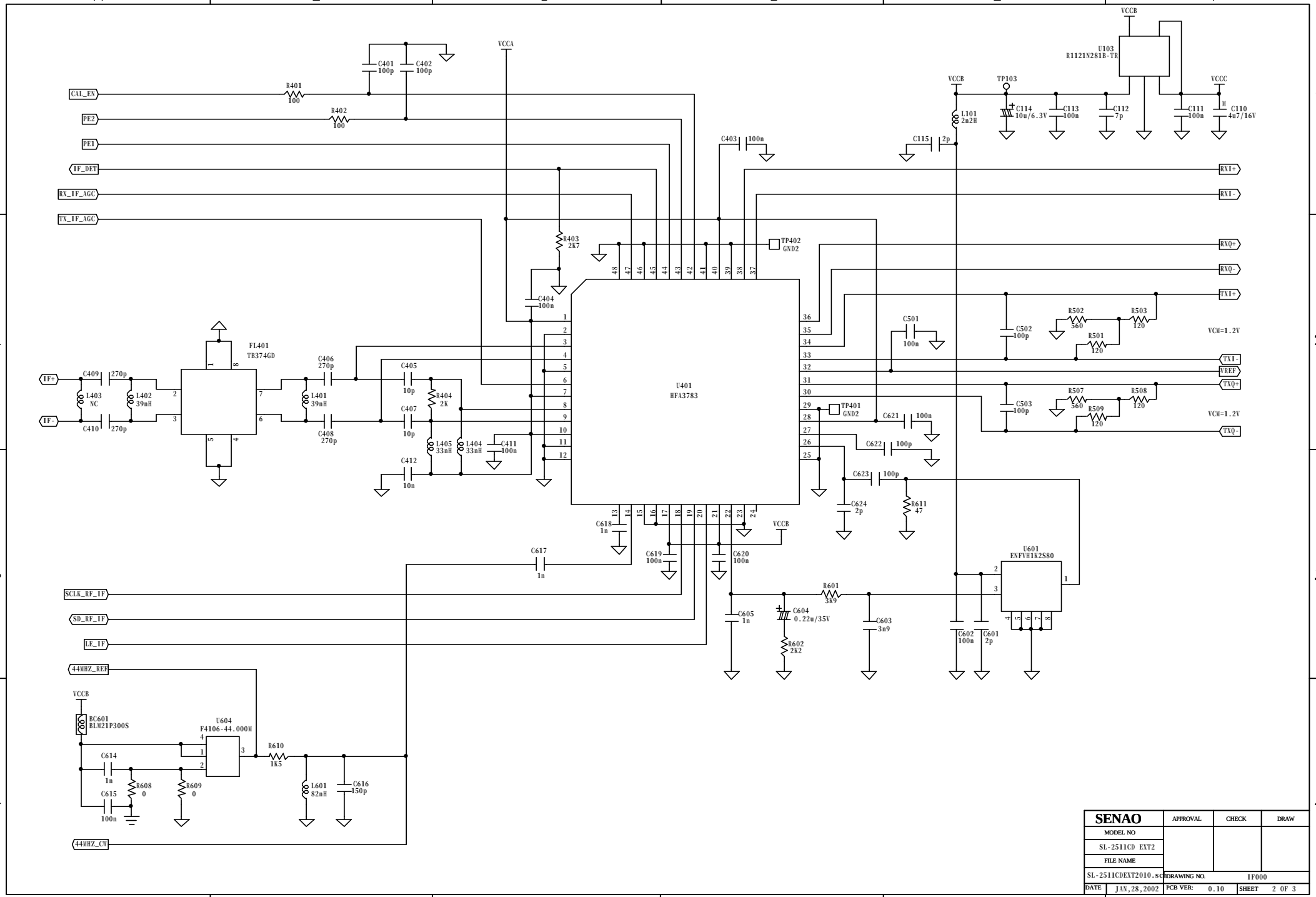

SENAO	APPROVAL	CHECK	DRAW
MODEL NO			
SL-2511CD EXT2			
FILE NAME			
SL-2511CDEXT2010.sch	DRAWING NO.	IF000	
DATE JAN,28,2002	PCB VER: 0.10	SHEET 2 OF 3	