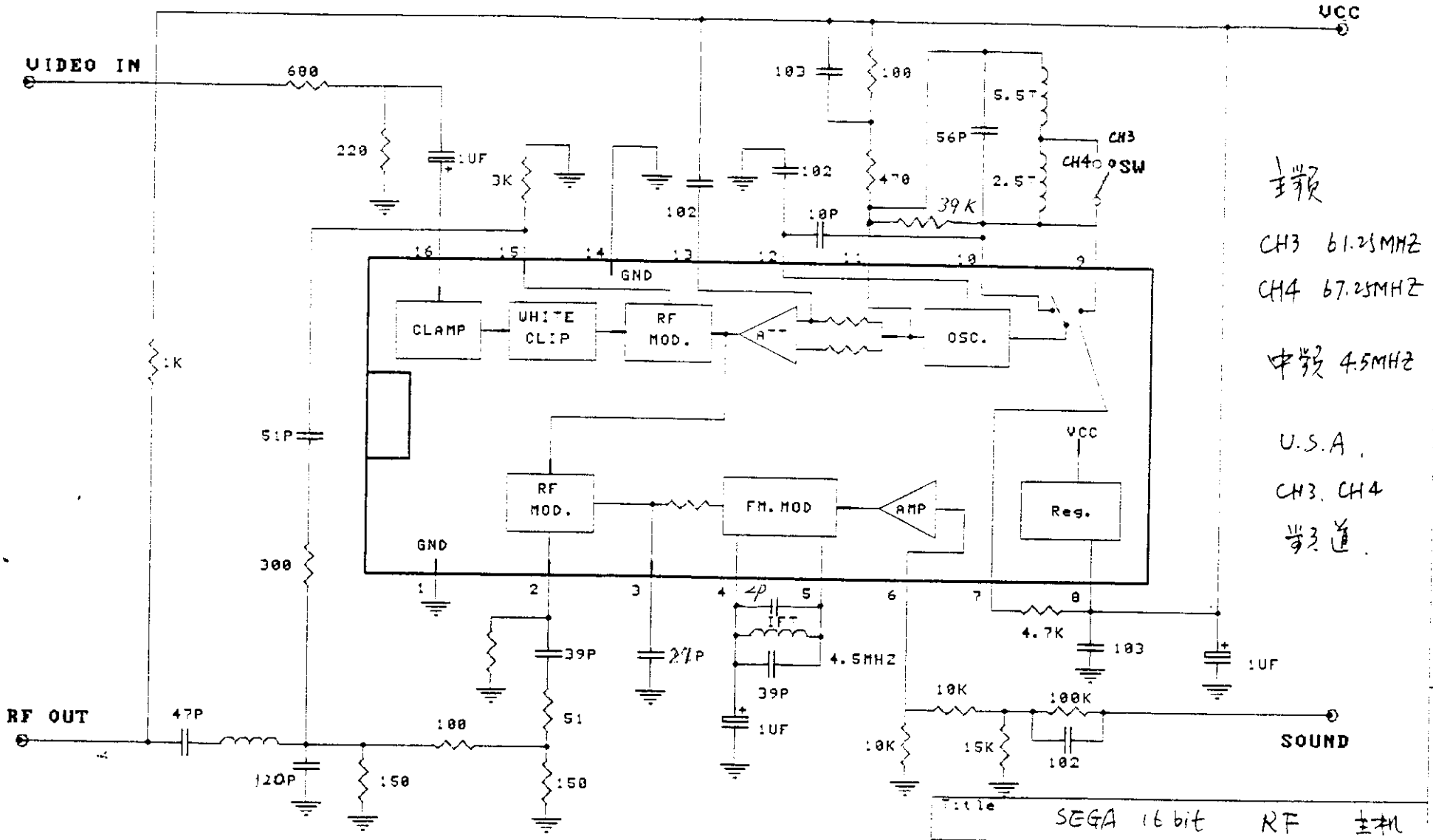

主频

CH3 61.25MHZ

CH4 67.25MHZ

中频 4.5MHZ

U.S.A.

CH3. CH4

频道.

Title	SEGA 16 bit RF 主机	
Size A4	Number	Revision
Date: 30-APR 1998		Sheet of
File: RF-"A863/"		Drawn By: