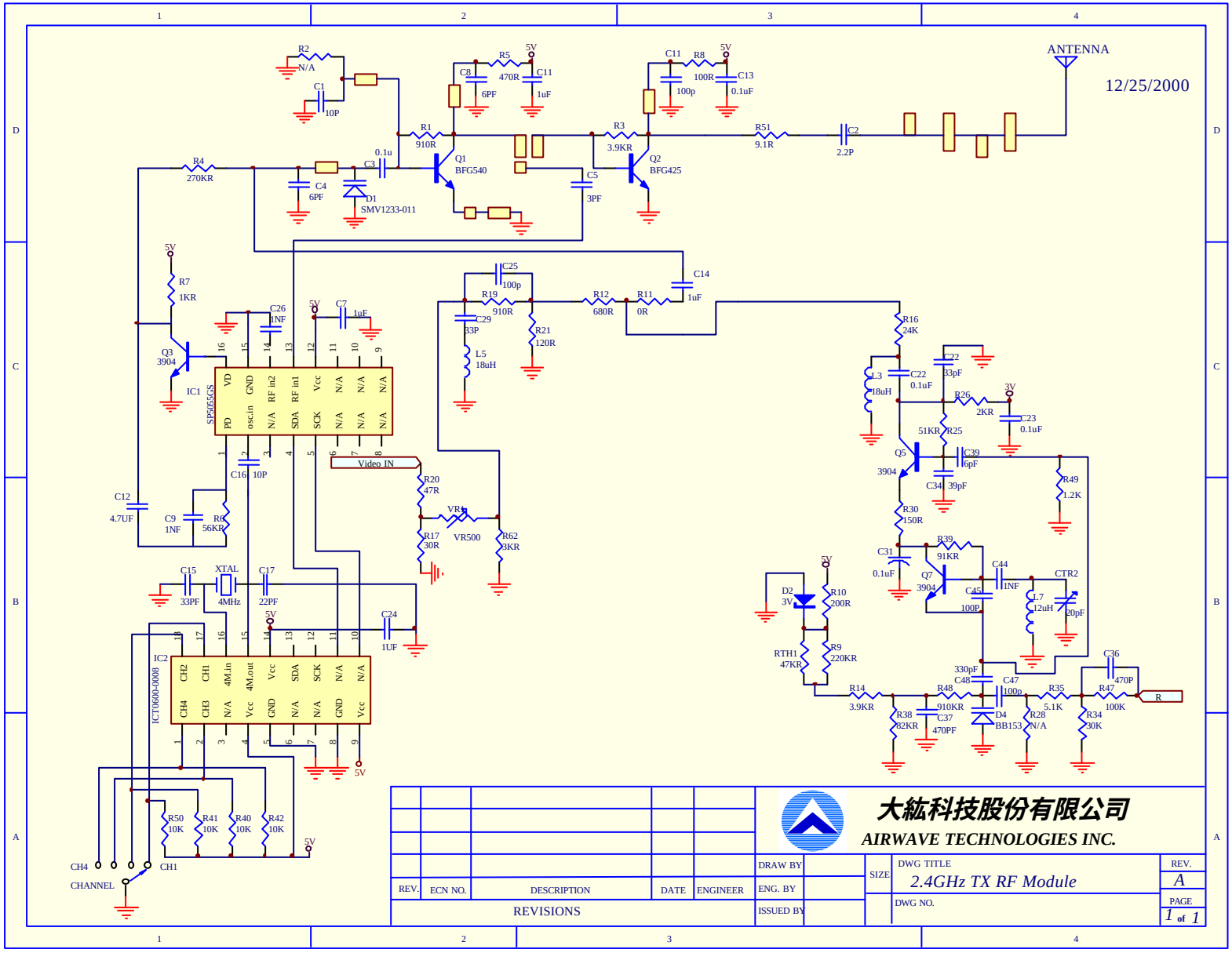
ANTENNA
12/25/2000
R2 N/A
C1 10P
R1 910R
Q1 BFG540
R5 470R
C8 6PF
C11 1uF
5V
C11 100p
R8 100R
C13 0.1uF
R3 3.9KR
Q2 BFG425
R51 9.1R
C2 2.2P
R4 270KR
C4 6PF
C3 0.1u
D1 SMV1233-011
C5 3PF
R7 1KR
Q3 3904
IC1 SP2055GS
VD GND RF in2 RF in1 Vcc N/A N/A N/A
PD osc.in N/A SDA SCK N/A N/A N/A
C26 1NF
C7 1uF
C16 10P
C12 4.7UF
C9 1NF
R6 56KR
Video IN
R20 47R
R17 30R
VR1
VR500
R62 3KR
C25 100p
R19 910R
C29 33P
L5 18uH
R21 120R
R12 680R
R11 0R
C14 1uF
R16 24K
L3 18uH
C22 0.1uF
C22 33pF
R26 2KR
3V
C23 0.1uF
51KR R25
Q5 3904
C39 6pF
C34 39pF
R49 1.2K
R30 150R
C31 0.1uF
R39 91KR
Q7 3904
C44 1NF
C45 100P
L7 12uH
CTR2 20pF
C15 33PF
XTAL 4MHz
C17 22PF
C24 1UF
IC2 ICT0600-0008
CH2 CH1 4M.in 4M.out Vcc SDA SCK N/A N/A
CH4 CH3 N/A Vcc GND N/A N/A GND Vcc
D2 3V
R10 200R
RTH1 47KR
R9 220KR
R14 3.9KR
R38 82KR
R48 910KR
C37 470PF
330pF C48
C47 100p
D4 BB153
R35 5.1K
R28 N/A
C36 470P
R47 100K
R34 30K
R
R50 10K
R41 10K
R40 10K
R42 10K
CH4
CH1
CHANNEL
大紘科技股份有限公司
AIRWAVE TECHNOLOGIES INC.
REV. ECN NO. DESCRIPTION DATE ENGINEER
REVISIONS
DRAW BY
ENG. BY
ISSUED BY
SIZE
DWG TITLE 2.4GHz TX RF Module
REV. A
DWG NO.
PAGE 1 of 1