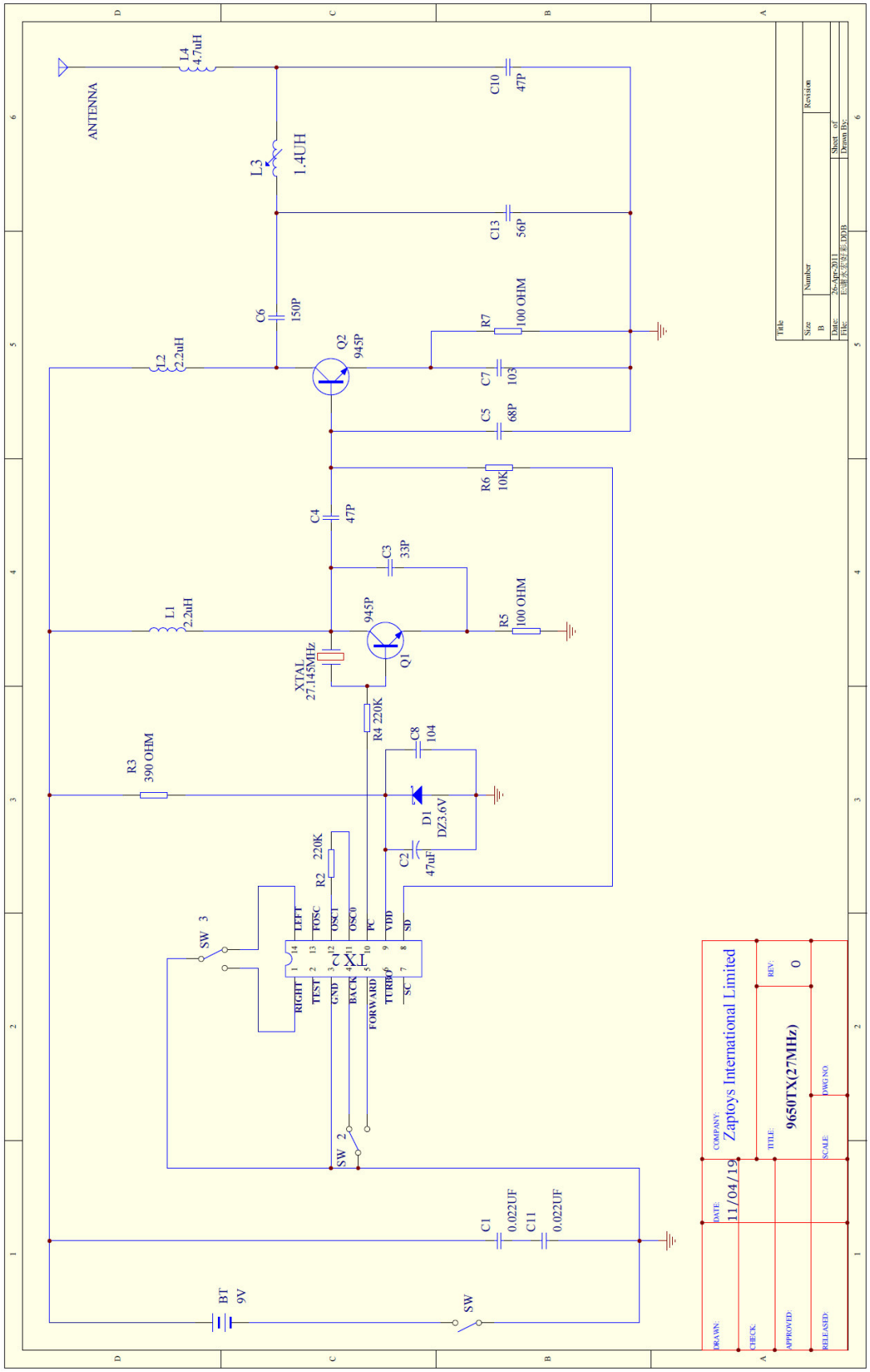Circuit diagram