Utan vårt uttryckliga tillstånd får denna handling icke utlämnas till obehöriga eller kopieras.Ej heller får dess innehåll delgivas obehöriga eller utnyttjas.All upphovsrätt till handlingens innehåll förblir vår liksom all rätt,om patent eller mönsterskydd erhålles. Överträdelse medför skadeståndsansvar.

Copying of this document,and giving it to others and the use or communication of the contents thereof,are forbidden whithout express authority.Offenders are liable to the payement of damages.All rights are reserved in the event of the grant of a patent or the registration of a utility model or design.

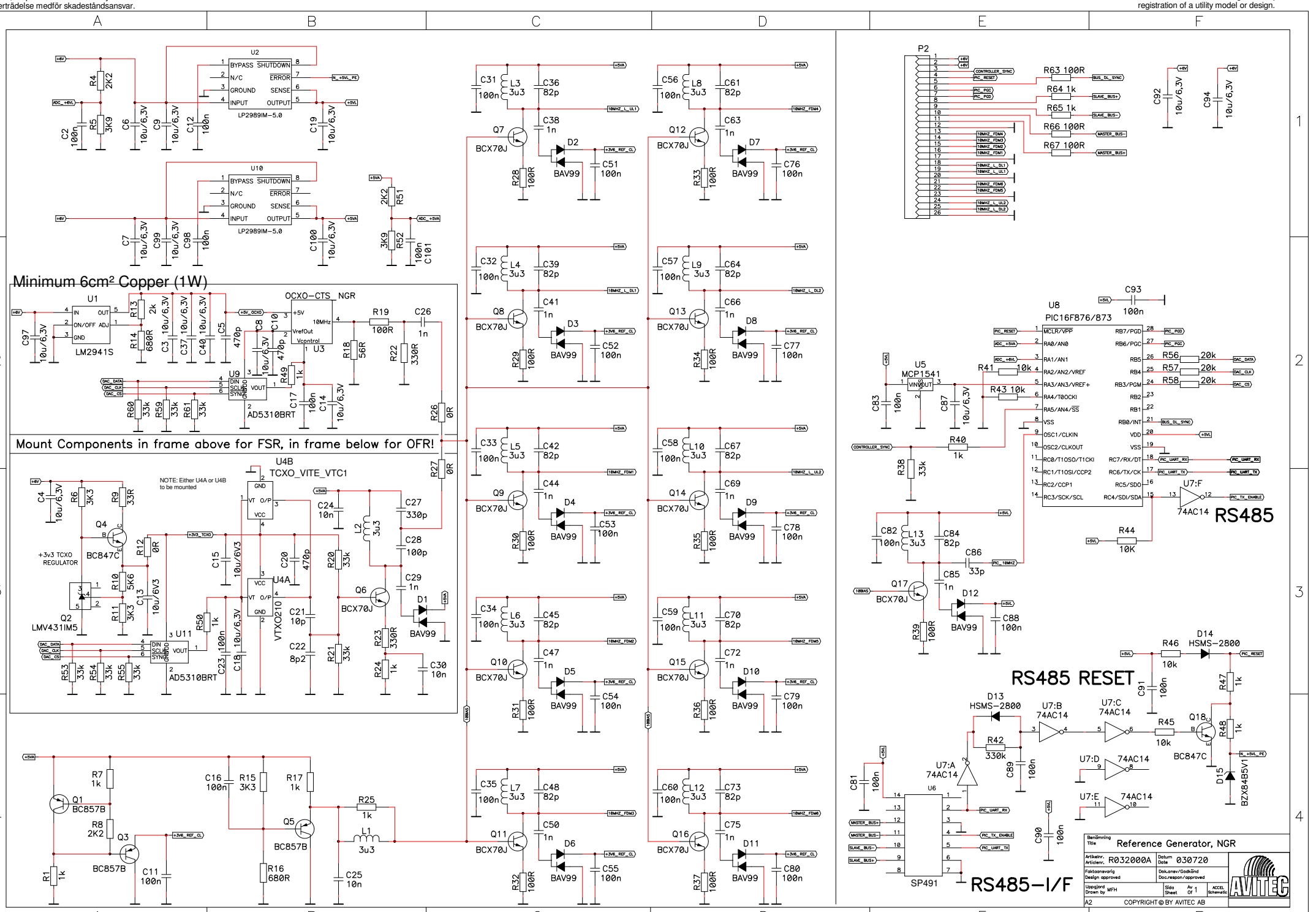

| Rev Nr. | Rev notering | Datum | Sign |
|---|---|---|---|
| X | XX | XX-XX-XX | XX |

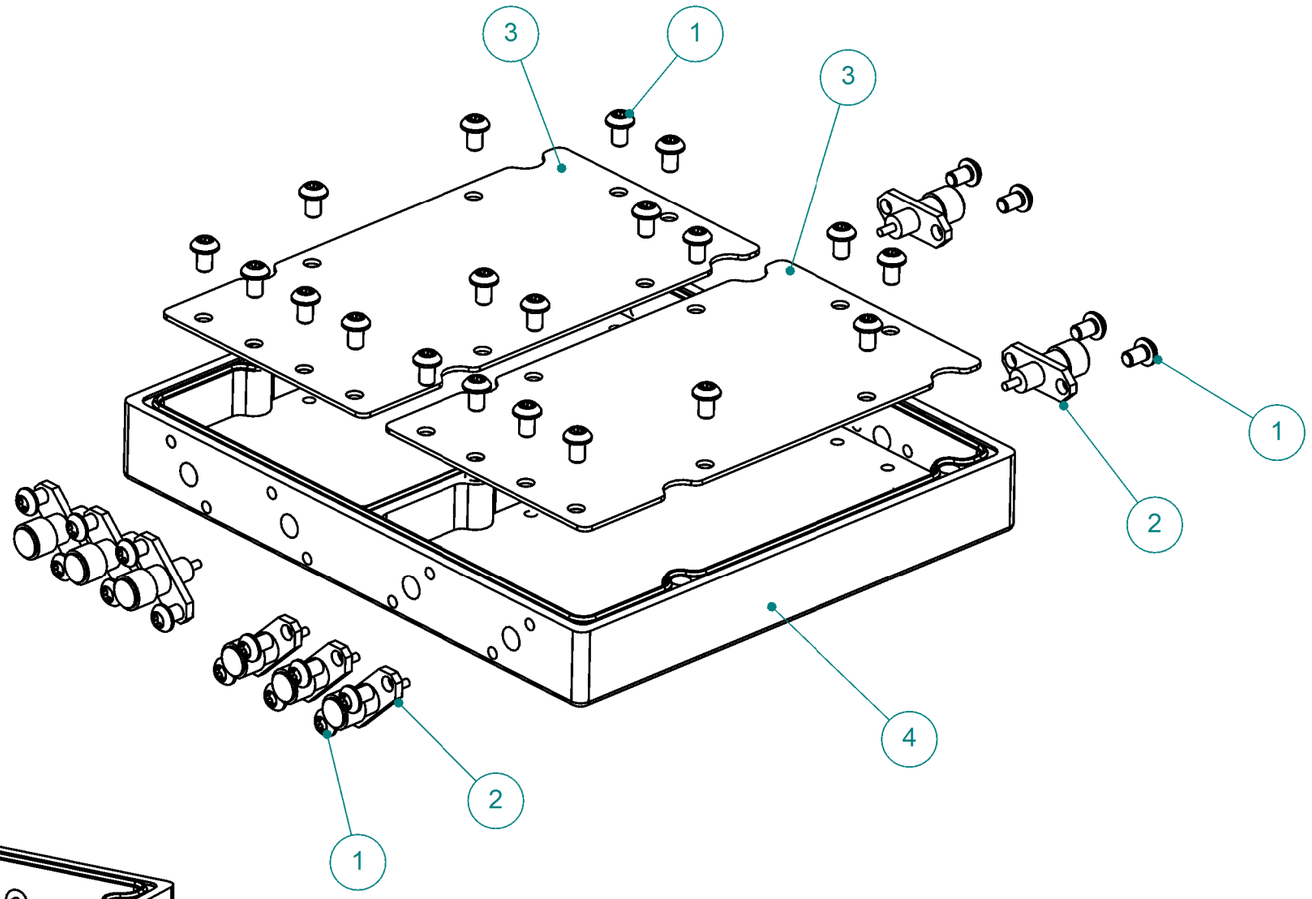


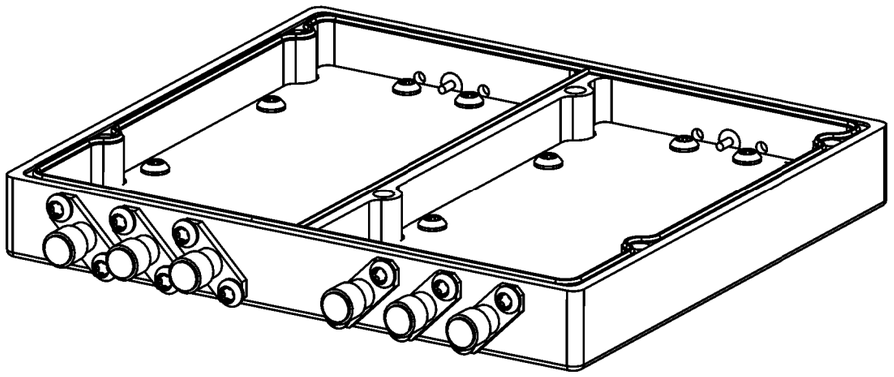

| Item No. | Part Number | Qty | Description |
|---|---|---|---|
| 1 | MRT -Torx M2. | 36 | Torx kullerig skalle |
| 2 | SMA | 8 | SMA |
| 3 | board | 2 | board |
| 4 | K1347001A | 1 | chassi |

Assembly Drawing / Sammanställningsritning

Material / Material

Ytbehandling / Surface Treatment

A3 ISO-E

IronCAD 2D drawing. Available as 3D part.
K1347101A.ics

DRW FileName: K1347101A.icd

Last saved: 2008-12-03 10:10

Scale: 1 : 1

General tolerances: ISO 2768-1 medium

Drawn: PW

Checked: PW

Ref: IRONCAD 10

axell WIRELESS

Title: RF Distribution Module

Sheet Nr: 1 ( 1 )

Rev.: A

Doc.Nr: K1347101

THIS IS A PROPERIETARY DESIGN OF AXELL WIRELESS LTD.
REPRODUCTION OR USE OF THIS DESIGN BY OTHERS IS
PERMISSIBLE ONLY IF EXPRESSLY AUTHORISED IN
WRITING BY AXELL WIRELESS LTD.

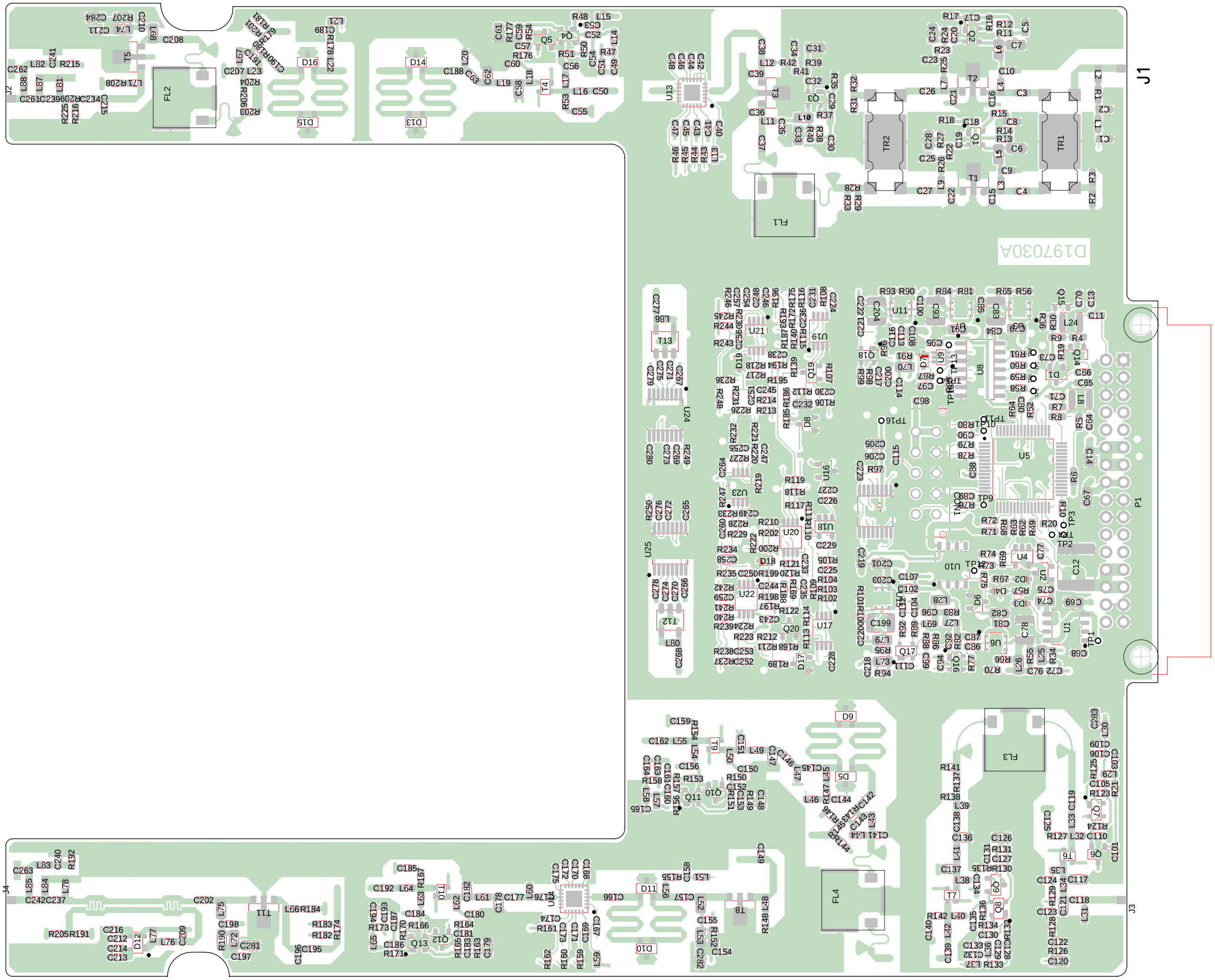
J1
J2
J3
J4
P1
D197030A
FL1
FL2
FL3
FL4
TR1
TR2

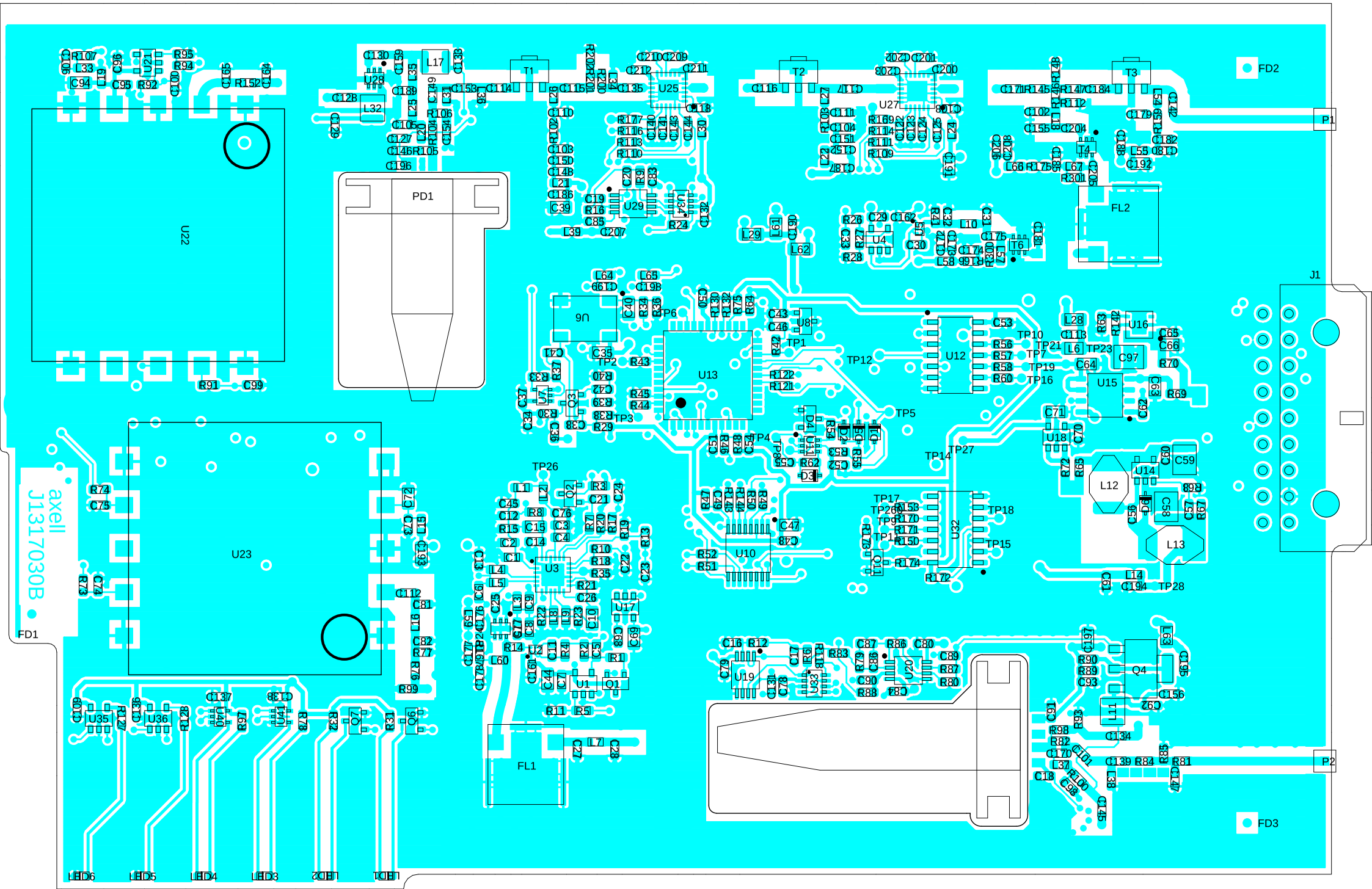
axell
J1317030B
FD1
FD2
FD3
P1
P2
J1
PD1
U22
U23
FL1
FL2
U13
U12
U15
U16
U10
U32
U25
U27
U29
U3
U1
U4
U8
U6
U14
U18
U19
U20
U33
U35
U36
U40
U41
U17
U2
U7
U11
U28
T1
T2
T3
T4
T6
L12
L13
L17
L32
LED6
LED5
LED4
LED3
LED2
LED1

| New Issue | Old Issue | Date | ECN No. | Remarks |
|---|---|---|---|---|
| | | | | |
| | | | | |
| | | | | |
| | | | | |

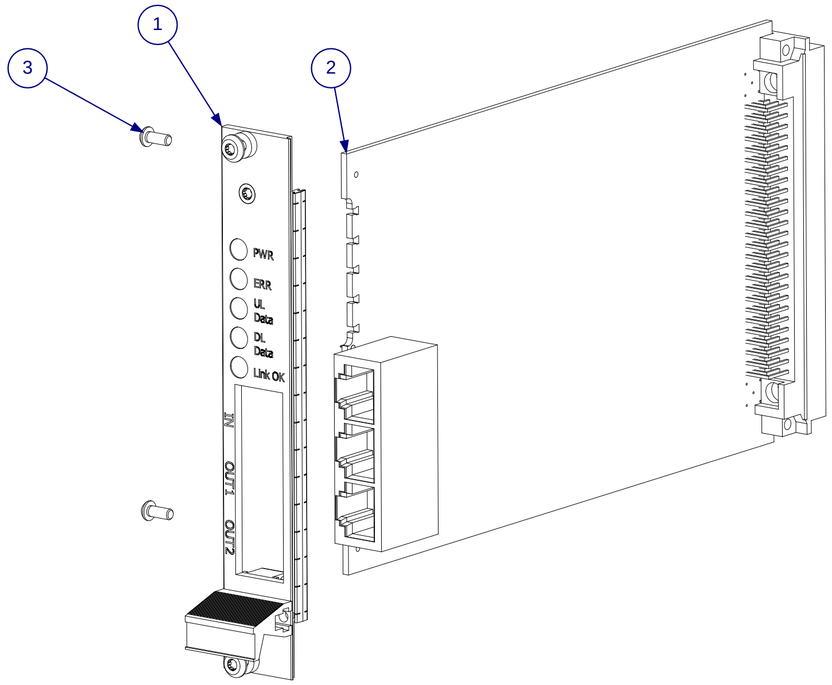


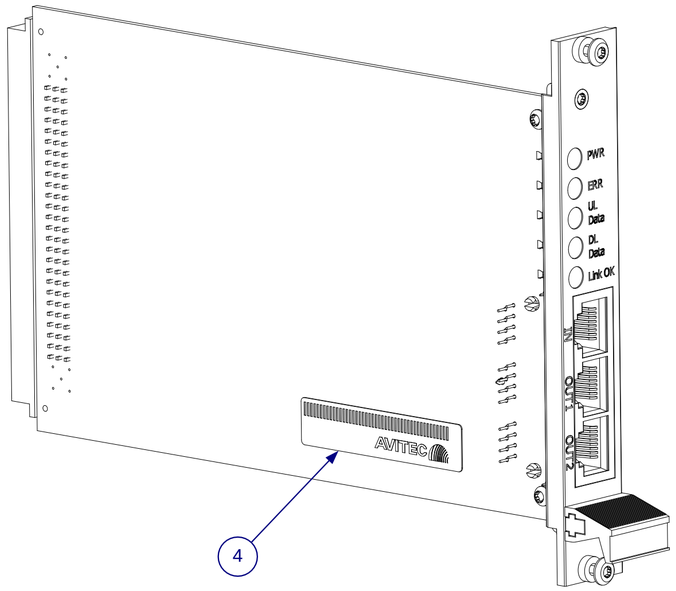


Sammanställningsritning/ Assembly Drawing

| | | | |
|---|---|---|---|
| Material / Material | | Ytbehandling / Surface Treatment | |
| A2 ISO-E | IronCAD 2D drawing. Available as 3D part. J1157101A.ICS | DRW FileName *J1157101A.icd* | Last saved 2007-05-10 12:32 |
| | Scale / General tolerances ISO 2768-1 medium | Drawn PW / Checked PW | Ref IRONCAD 9 |
| AVITEC | | Title *RCB* | Sheet Nr 1 ( 1) / Rev. A |
| | | | Doc.Nr *J1157101* |

This document and its contents are the exclusive property of FORETAGET AB, and may not be copied, reproduced, transmitted or communicated to a third party, or used for any purpose without written permission.

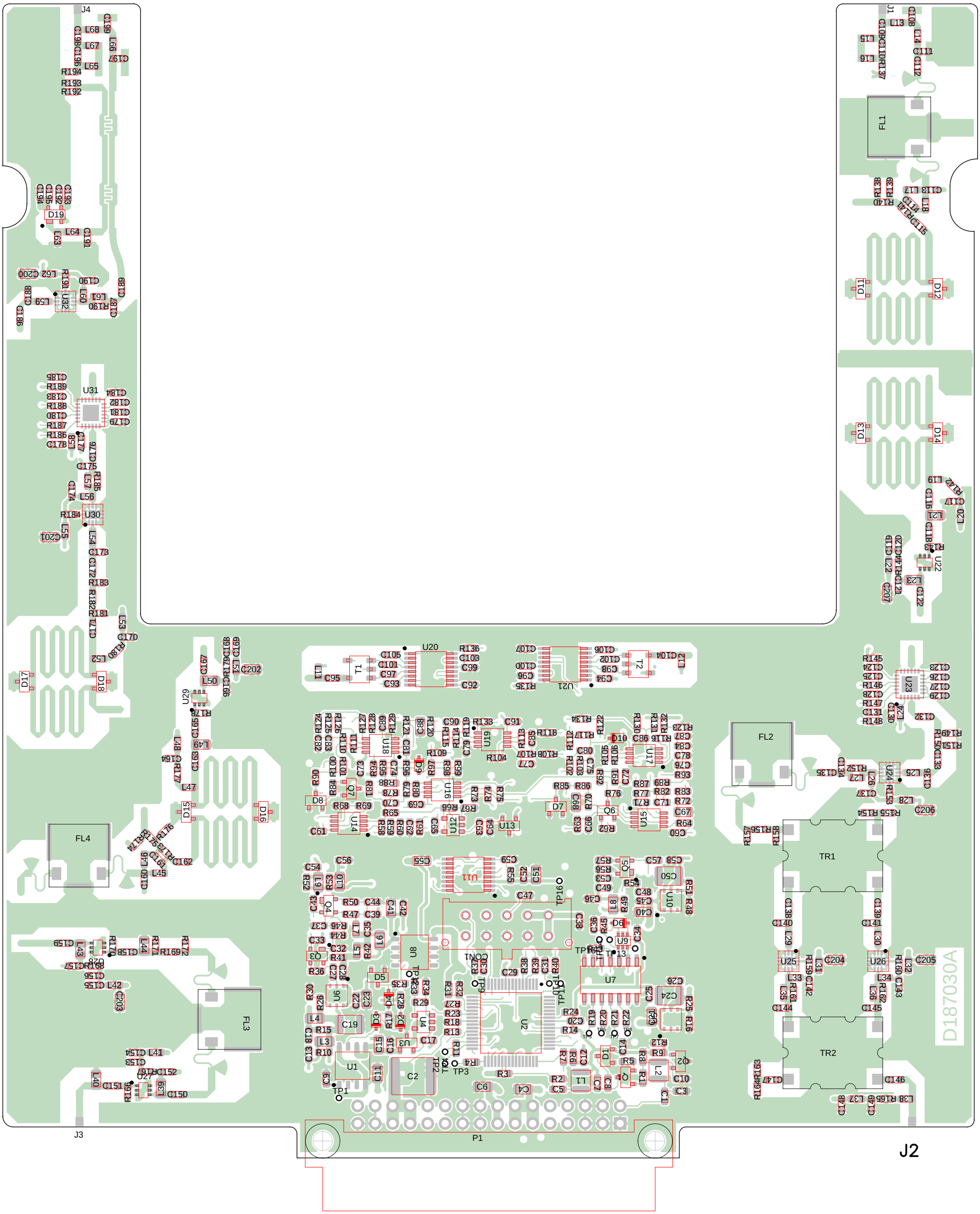
D187030A
J2
J3
J4
J1
P1
FL1
FL2
FL3
FL4
TR1
TR2
U2
U7
U20
U21
U23
U31
T1
T2

Utan vårt uttryckliga tillstånd får denna handling icke utlämnas till obehöriga eller kopieras.Ej heller får dess innehåll delgivas obehöriga eller utnyttjas.All upphovsrätt till handlingens innehåll förblir vår liksom all rätt,om patent eller mönsterskydd erhålles. Överträdelse medför skadeståndsansvar.

Copying of this document,and giving it to others and the use or communication of the contents thereof,are forbidden whithout express authority.Offenders are liable to the payement of damages.All rights are reserved in the event of the grant of a patent or the registration of a utility model or design.

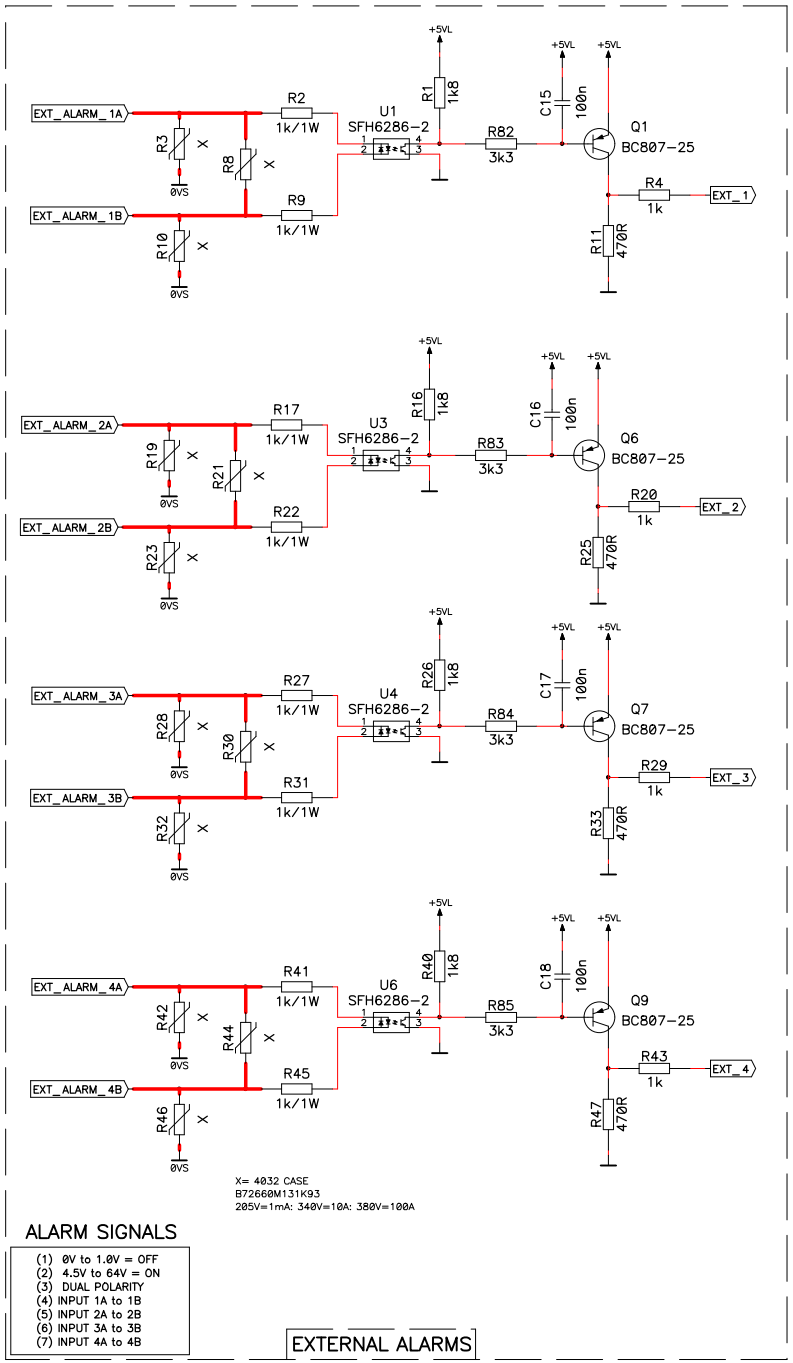


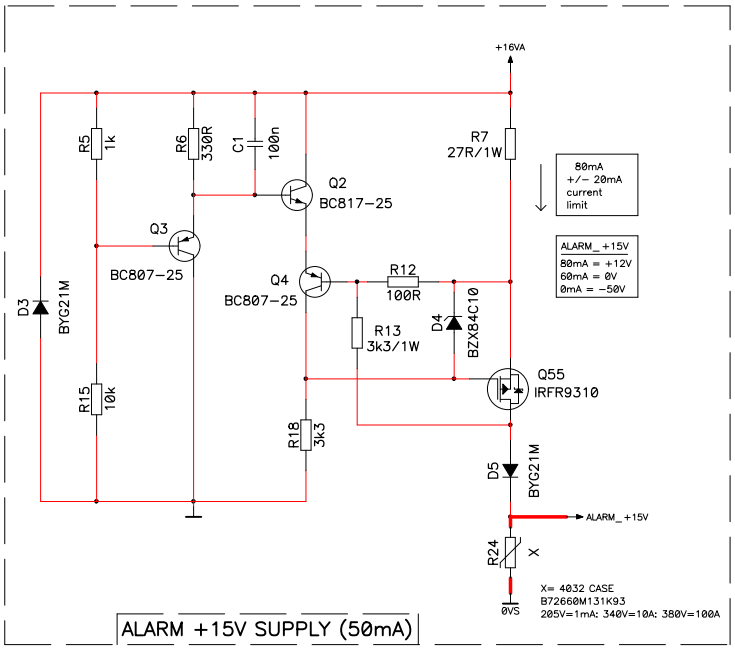


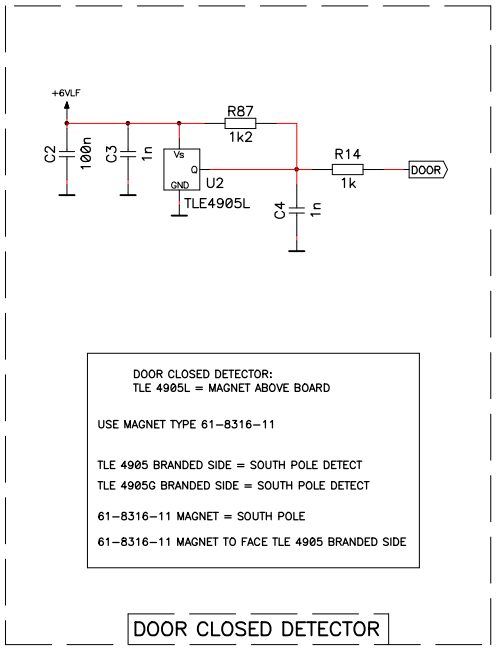


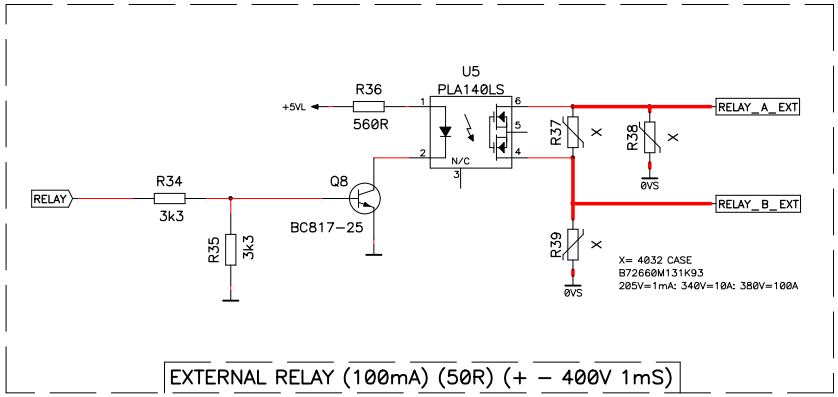


| | |
|---|---|
| Benämning / Title | External Interface Board,NGR Version1 |
| Artikelnr. / Articlenr. | J692030B |
| Datum / Date | 031010 |
| Faktagranskad / Design approved | |
| Dok.ansv/Godkänd / Doc.respon/approved | |
| Uppgjord / Drawn by | JRU |
| Sida / Sheet | Av / Of 3 |
| ACCEL Schematic | |
| A2 | COPYRIGHT © BY AVITEC AB |

AVITEC

Utan vårt uttryckliga tillstånd får denna handling icke utlämnas till obehöriga eller kopieras.Ej heller får dess innehåll delgivas obehöriga eller utnyttjas.All upphovsrätt till handlingens innehåll förblir vår liksom all rätt,om patent eller mönsterskydd erhålles. Överträdelse medför skadeståndsansvar.

Copying of this document,and giving it to others and the use or communication of the contents thereof,are forbidden whithout express authority.Offenders are liable to the payement of damages.All rights are reserved in the event of the grant of a patent or the registration of a utility model or design.

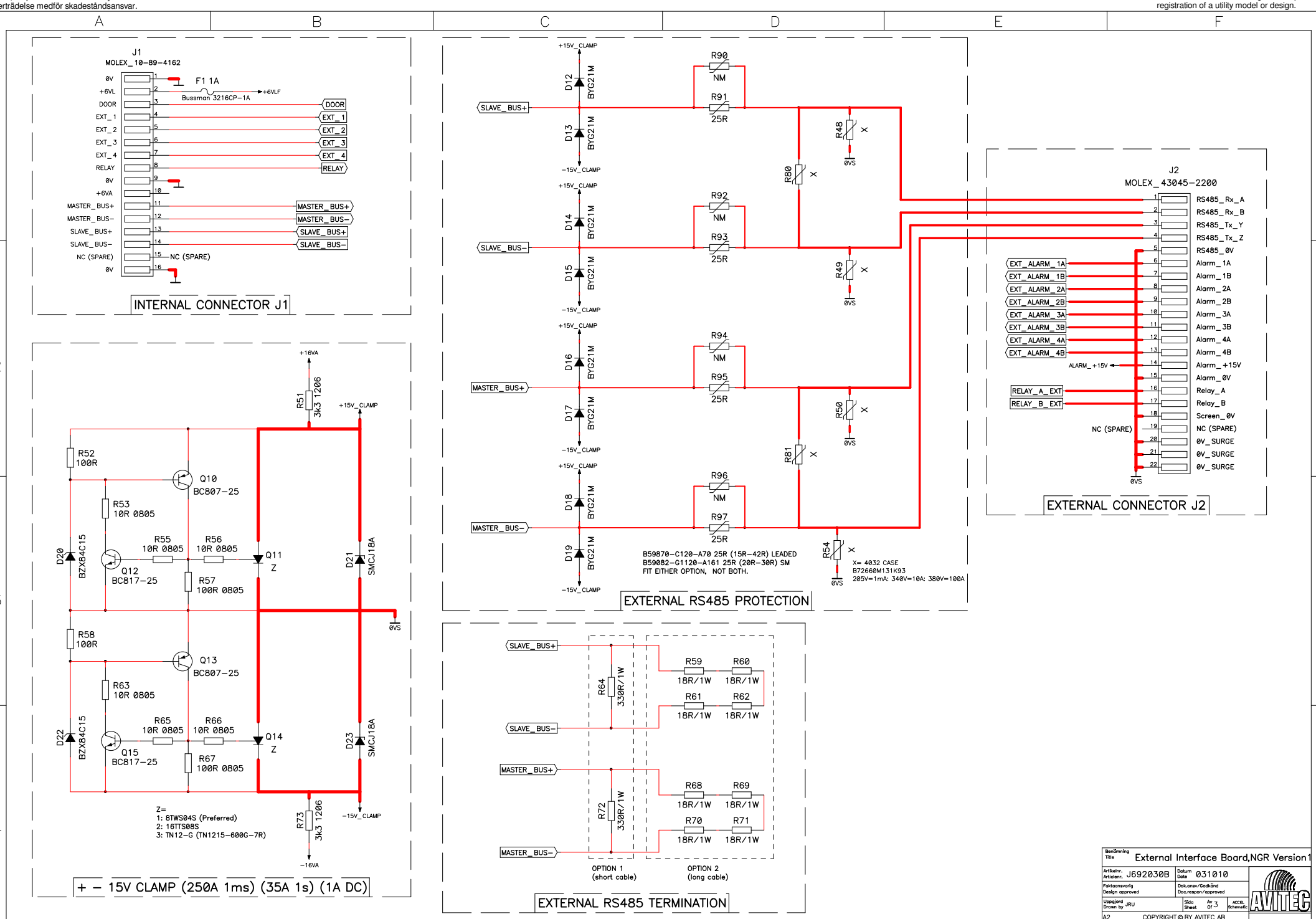

Utan vårt uttryckliga tillstånd får denna handling icke utlämnas till obehöriga eller kopieras.Ej heller får dess innehåll delgivas obehöriga eller utnyttjas.All upphovsrätt till handlingens innehåll förblir vår liksom all rätt,om patent eller mönsterskydd erhålles. Överträdelse medför skadeståndsansvar.

Copying of this document,and giving it to others and the use or communication of the contents thereof,are forbidden whithout express authority.Offenders are liable to the payement of damages.All rights are reserved in the event of the grant of a patent or the registration of a utility model or design.

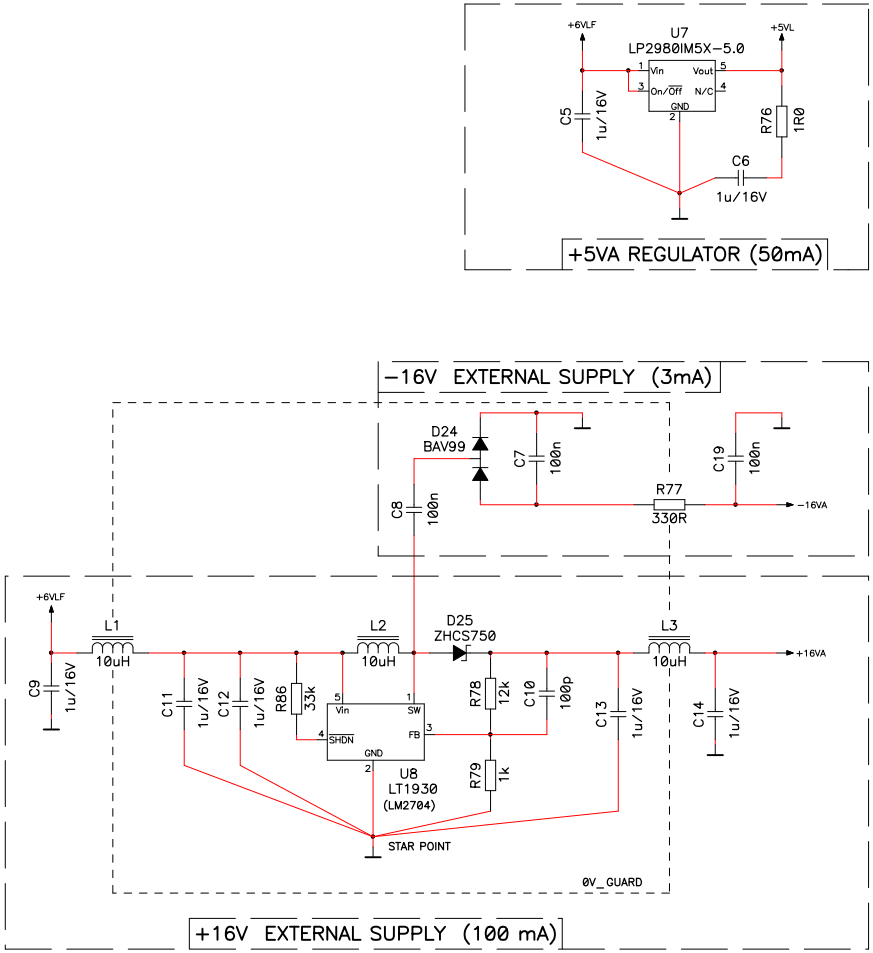


## EXTERNAL PROTECTION

| | | |
|---|---|---|
| (1) +-100A | 8/20 uS | 10,000 SURGE |
| (1) +-100A | 10/350 uS | 2 SURGE |
| (2) +-60A | 10/350 uS | 10 SURGE |
| (3) +-45A | 10/350 uS | 100 SURGE |
| (4) +-30A | 10/350 uS | 1000 SURGE |
| (5) +-18A | 10/350 uS | 10,000 SURGE |
| (1) +-100A | 1/1000 uS | 1 SURGE |
| (2) +-33A | 1/1000 uS | 10 SURGE |
| (3) +-25A | 1/1000 uS | 100 SURGE |
| (4) +-17A | 1/1000 uS | 1000 SURGE |
| (5) +-10A | 1/1000 uS | 10,000 SURGE |
| (1) +-64V | DC | CONTINUOUS |

PROTECTION IS FOR 100A MAXIMUM
PROTECTION TURN ON MORE THAN +-200V
PROTECTION CLAMP LESS THAN +-400V
EXTERNAL LPU CLAMP LESS THAN 100V
EXTERNAL LPU 0V TO REPEATER 0V = 100V MAX
X VARISTORS NOT TURN ON IF EXTERNAL LPU
PROTECTION CLAMP 400V MAX WIRE TO WIRE
PROTECTION CLAMP 400V MAX WIRE TO 0V
PROTECTION CURRENT IS FOR EACH PIN
MAXIMUM TOTAL CURRENT IN 0V_SURGE = 1500A
WIRES ASSUMED TO BE 50R DURING SURGE
100A IN 50R WIRES IS 5kV PEAK

## BUILD OPTIONS

BUILD #1 = Standard

(1) INTERNAL CONNECTOR J1
(2) DOOR CLOSED DETECTOR

BUILD #2 = Alarms

(1) INTERNAL CONNECTOR J1
(2) DOOR CLOSED DETECTOR
(3) +5VA REGULATOR
(4) EXTERNAL ALARMS
(5) EXTERNAL RELAY
(6) +16V EXTERNAL SUPPLY
(7) ALARM +15V SUPPLY
(8) INTERNAL CONNECTOR J2

BUILD#3 = Alarms with RS485 for Short Cables

(1) INTERNAL CONNECTOR J1
(2) DOOR CLOSED DETECTOR
(3) +5VA REGULATOR
(4) EXTERNAL ALARMS
(5) EXTERNAL RELAY
(6) +16V EXTERNAL SUPPLY
(7) ALARM +15V SUPPLY
(8) INTERNAL CONNECTOR J2
(9) -16V EXTERNAL SUPPLY
(10) EXTERNAL RS485 PROTECTION
(11) + - 15V CLAMP
(12) EXTERNAL RS485 TERMINATION 1

BUILD #4 = Alarms with RS485 for Long Cables

(1) INTERNAL CONNECTOR J1
(2) DOOR CLOSED DETECTOR
(3) +5VA REGULATOR
(4) EXTERNAL ALARMS
(5) EXTERNAL RELAY
(6) +16V EXTERNAL SUPPLY
(7) ALARM +15V SUPPLY
(8) INTERNAL CONNECTOR J2
(9) -16V EXTERNAL SUPPLY
(10) EXTERNAL RS485 PROTECTION
(11) + - 15V CLAMP
(12) EXTERNAL RS485 TERMINATION 2

## OPTION BLOCKS

(1) INTERNAL CONNECTOR J1
(2) EXTERNAL CONNECTOR J2
(3) DOOR CLOSED DETECTOR 1
(4) +5VA REGULATOR
(5) EXTERNAL ALARMS
(6) EXTERNAL RELAY
(7) +16V EXTERNAL SUPPLY
(8) -16V EXTERNAL SUPPLY
(9) ALARM +15V SUPPLY
(10) EXTERNAL RS485 PROTECTION
(11) + - 15V CLAMP
(12) EXTERNAL RS485 TERMINATION 1
(13) EXTERNAL RS485 TERMINATION 2

## TRACK WIDTHS

(1) 4.0 mm (160mil)
(2) 2.0 mm (80mil)
(3) 1.0 mm (40mil)
(4) 0.25 mm (10mil)

| | |
|---|---|
| Benämning / Title | External Interface Board,NGR Version1 |
| Artikelnr. / Articlenr. | J692030B |
| Datum / Date | 031010 |
| Faktagranskad / Design approved | |
| Dok.ansv/Godkänd / Doc.respon/approved | |
| Uppgjord / Drawn by | JRU |
| Sida / Sheet | Av / Of 3 |
| ACCEL Schematic | |

A2 COPYRIGHT © BY AVITEC AB

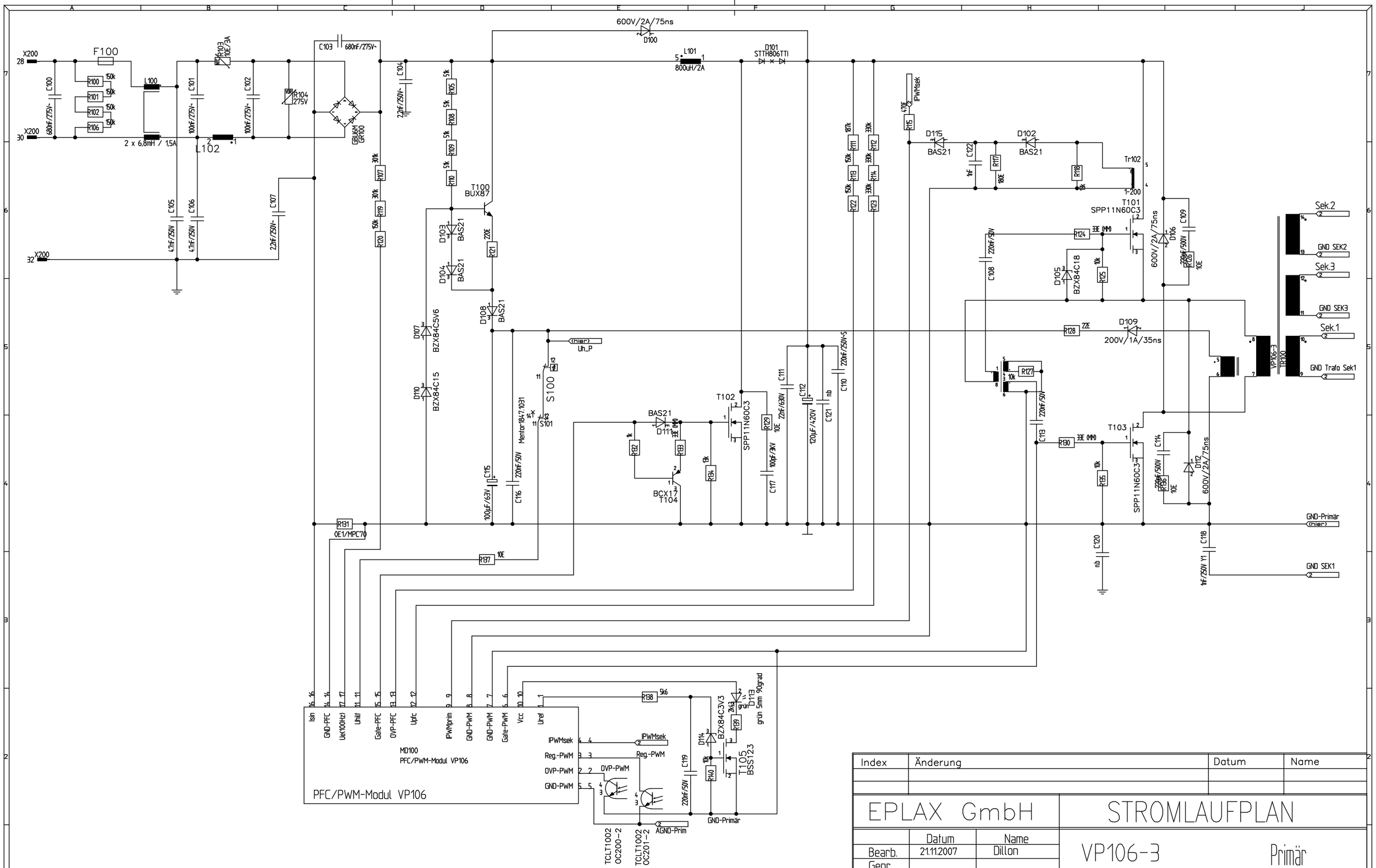


| Index | Änderung | Datum | Name |
|---|---|---|---|
| | | | |
| | | | |

EPLAX GmbH

STROMLAUFPLAN

| | Datum | Name |
|---|---|---|
| Bearb. | 21.11.2007 | Dillon |
| Gepr. | | |
| EQ(A) | | |

VP106-3 Primär

894-030622G-10 Blatt 1

Datei: sb182 Datum: 26.11.2007 Bl. 2

VERTRAULICH
Der Inhalt der Unterlagen ist geistiges Eigentum und Betriebsgeheimnis der Firma EPLAX GmbH. Die Weitergabe und Zugänglichmachung der Unterlagen oder der Inhalte, auch nur auszugsweise, bedürfen der ausdrücklichen Zustimmung der Eigentümerin ( §§ 17-20 UWG; §§ 97-100 UrhG; §§ 823, 826 BGB; § 3, Abs. 4, Nr.1 PatG; § 1, Abs. 2 GebmG )

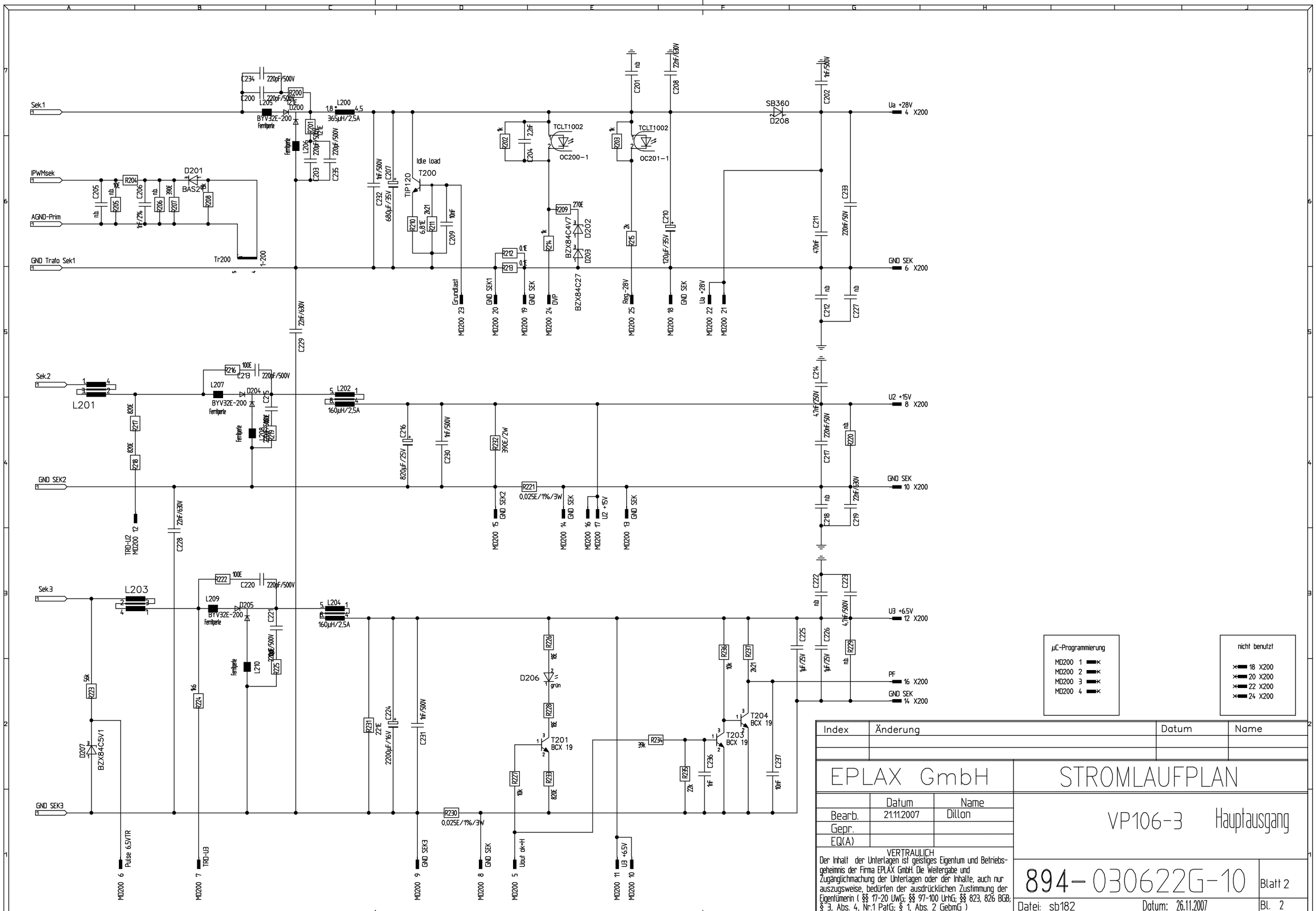


| Index | Änderung | Datum | Name |
|---|---|---|---|
| | | | |
| | | | |

EPLAX GmbH

STROMLAUFPLAN

| | Datum | Name |
|---|---|---|
| Bearb. | 21.11.2007 | Dillon |
| Gepr. | | |
| EQ(A) | | |

VP106-3 Hauptausgang

VERTRAULICH
Der Inhalt der Unterlagen ist geistiges Eigentum und Betriebsgeheimnis der Firma EPLAX GmbH. Die Weitergabe und Zugänglichmachung der Unterlagen oder der Inhalte, auch nur auszugsweise, bedürfen der ausdrücklichen Zustimmung der Eigentümerin ( §§ 17-20 UWG; §§ 97-100 UrhG; §§ 823, 826 BGB; § 3, Abs. 4, Nr.1 PatG; § 1, Abs. 2 GebmG )

894-030622G-10

Blatt 2

Datei: sb182 Datum: 26.11.2007 Bl. 2

| | V1 | V2 | V3 | V4 |
|---|---|---|---|---|
| GSM/UMTS | 28,0 | 15,0 | 6,45 | 6,45 |
| TETRA | 26,0 | 15,0 | 10,0 | 5,0 |

Kretsschemat beskriver GSM/UMTS montering
För TETRA montering se stycklistan

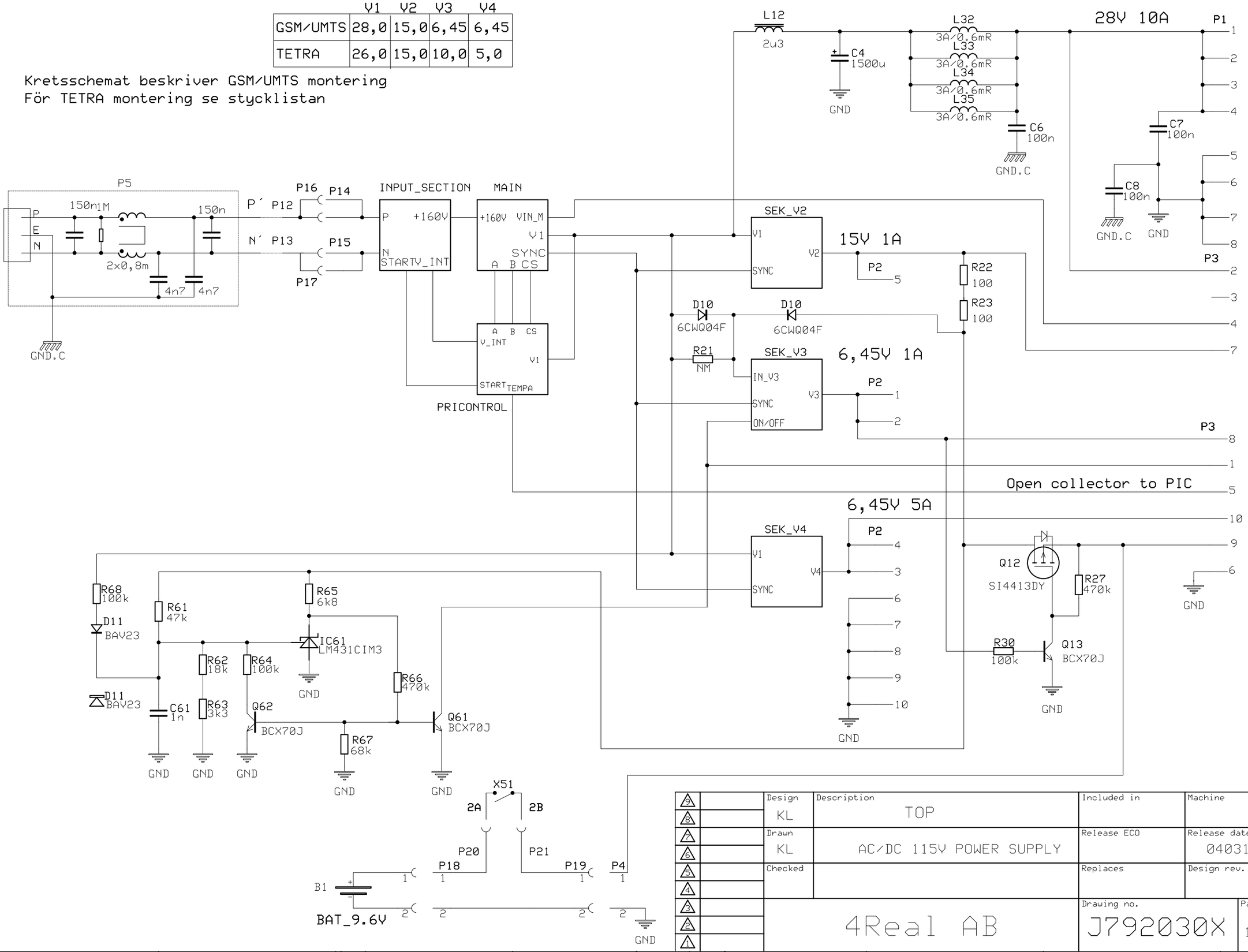


| | | | |
|---|---|---|---|
| Design: KL | Description: TOP | Included in | Machine |
| Drawn: KL | AC/DC 115V POWER SUPPLY | Release ECO | Release date: 040317 |
| Checked | | Replaces | Design rev. |
| 4Real AB | | Drawing no.: J792030X | Page: 1(7) |

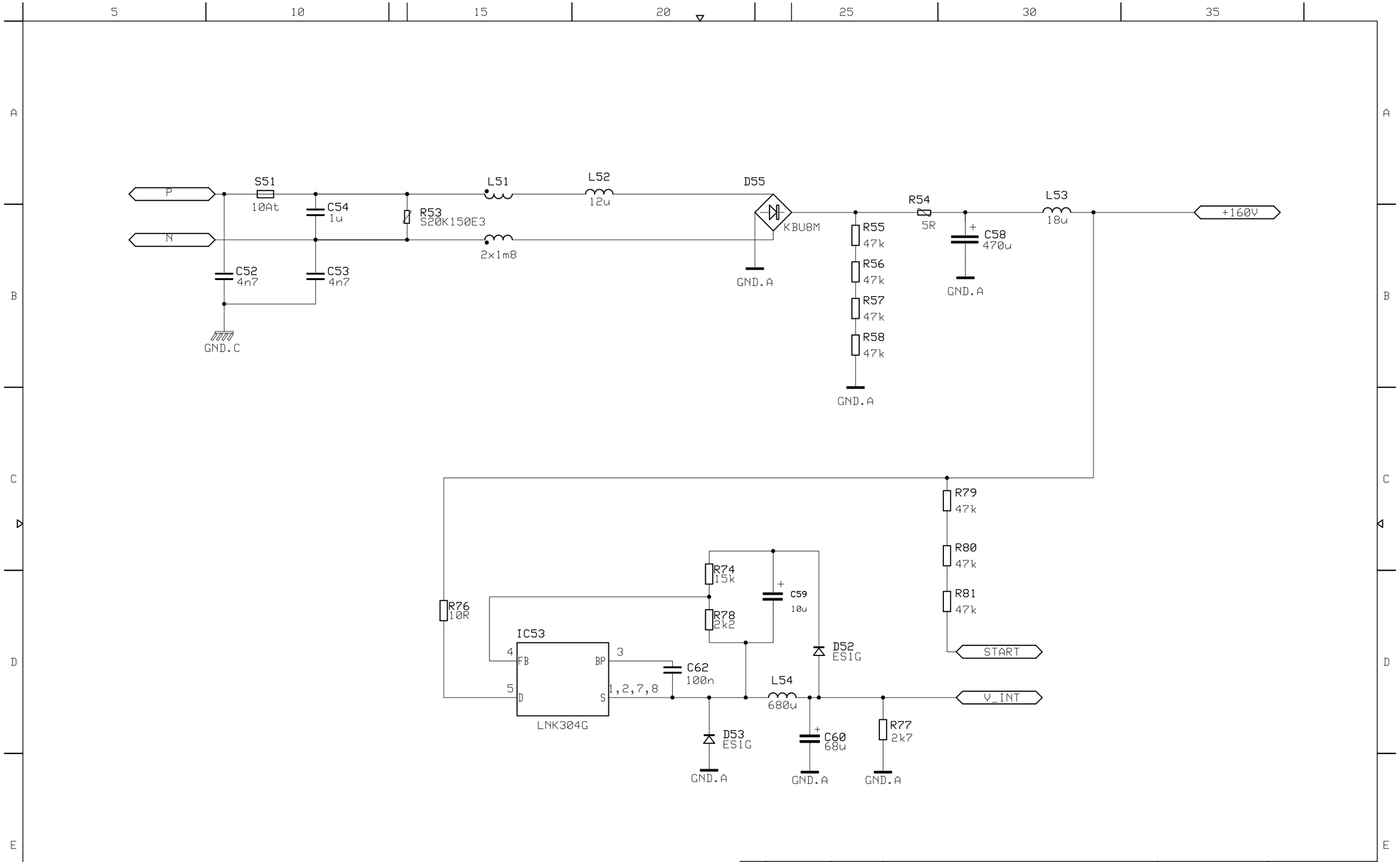


| | | | |
|---|---|---|---|
| Design | Description INPUT_SECTION | Included in | Machine |
| Drawn | TOP! | Release ECO | Release date 040317 |
| Checked | | Replaces | Design rev. |
| 4Real AB | | Drawing no. J792030X | Page 2/7 |

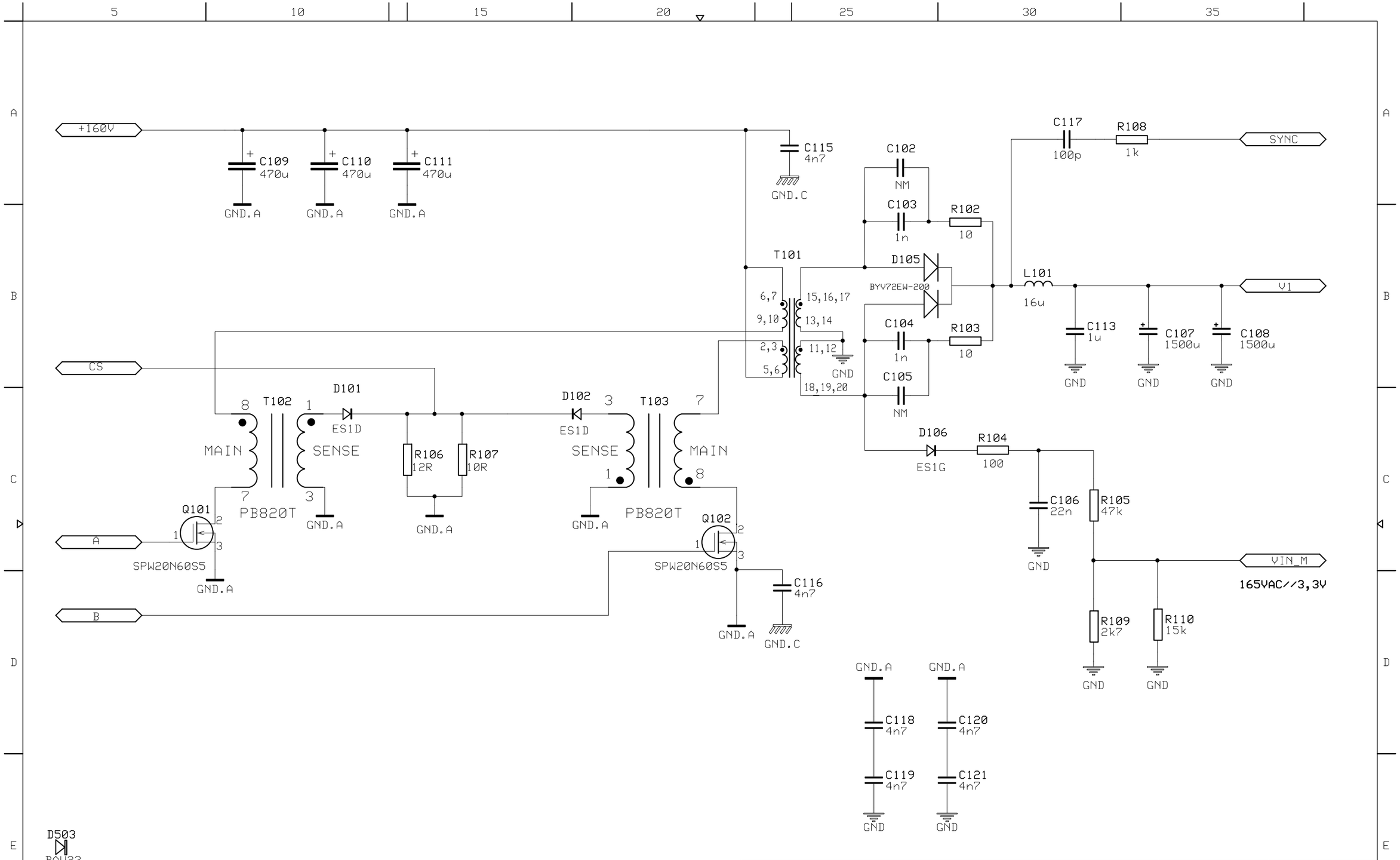


| | | | |
|---|---|---|---|
| Design | Description: MAIN | Included in | Machine |
| Drawn | TOP! | Release ECO | Release date: 040317 |
| Checked | | Replaces | Design rev. |
| 4Real AB | | Drawing no.: J792030X | Page: 3/7 |

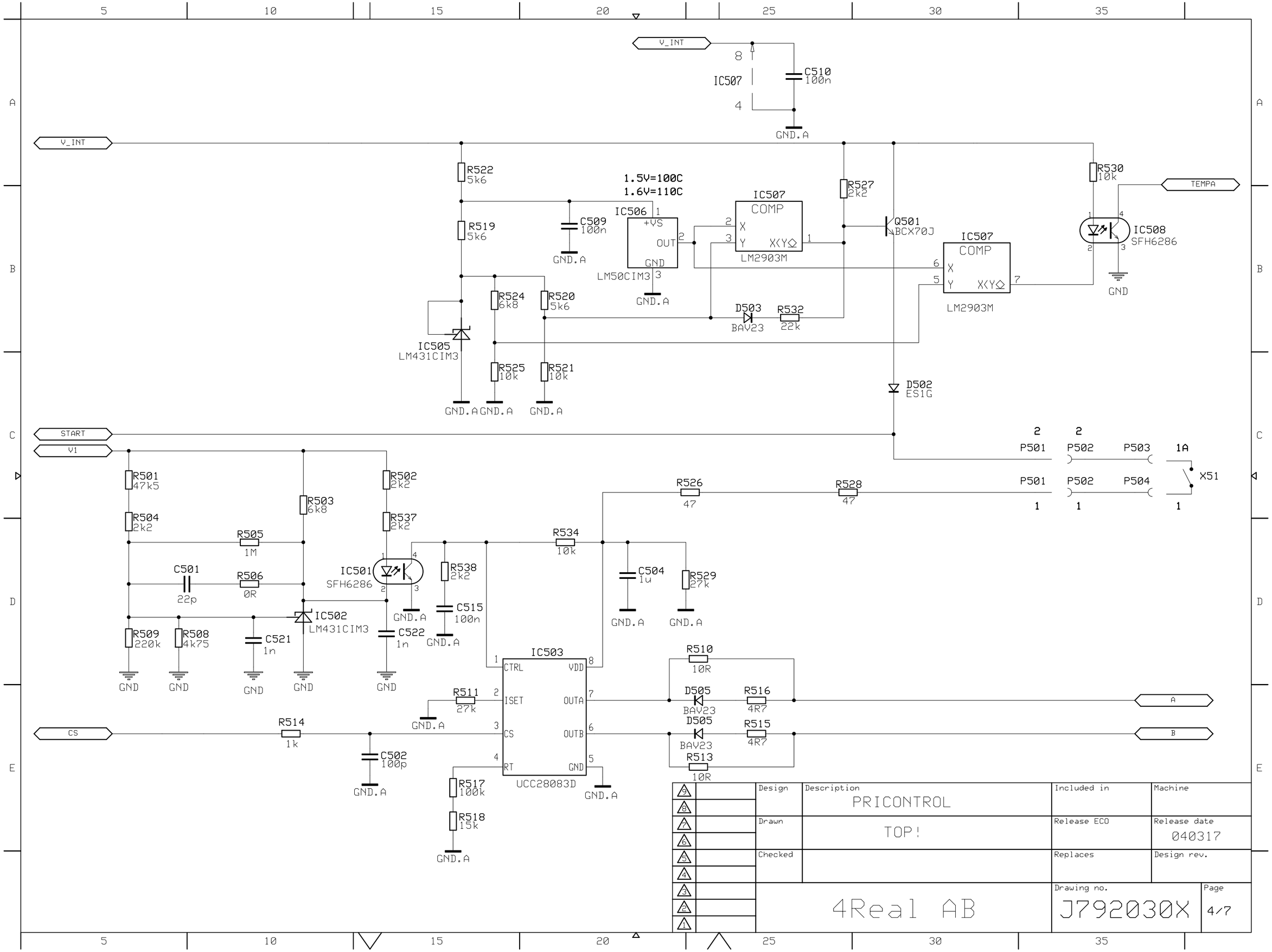
V_INT
IC507
C510
100n
GND.A
R522
5k6
R519
5k6
C509
100n
1.5V=100C
1.6V=110C
IC506
+VS
OUT
GND
LM50CIM3
IC507
COMP
X
Y
X<Y
LM2903M
R527
2k2
Q501
BCX70J
R530
10k
TEMPA
IC508
SFH6286
GND
R524
6k8
R520
5k6
D503
BAY23
R532
22k
IC505
LM431CIM3
R525
10k
R521
10k
D502
ES1G
START
V1
P501
P502
P503
P504
1A
X51
R501
47k5
R504
2k2
R503
6k8
R502
2k2
R537
2k2
R505
1M
R506
0R
C501
22p
IC501
SFH6286
R538
2k2
C515
100n
R526
47
R528
47
R534
10k
C504
1u
R529
27k
IC502
LM431CIM3
C522
1n
R509
220k
R508
4k75
C521
1n
IC503
CTRL
ISET
CS
RT
VDD
OUTA
OUTB
GND
UCC28083D
R510
10R
D505
BAY23
R516
4R7
R515
4R7
R513
10R
R511
27k
R514
1k
C502
100p
R517
100k
R518
15k
A
B
CS
Design
Description
PRICONTROL
Included in
Machine
Drawn
TOP!
Release ECO
Release date
040317
Checked
Replaces
Design rev.
4Real AB
Drawing no.
J792030X
Page
4/7

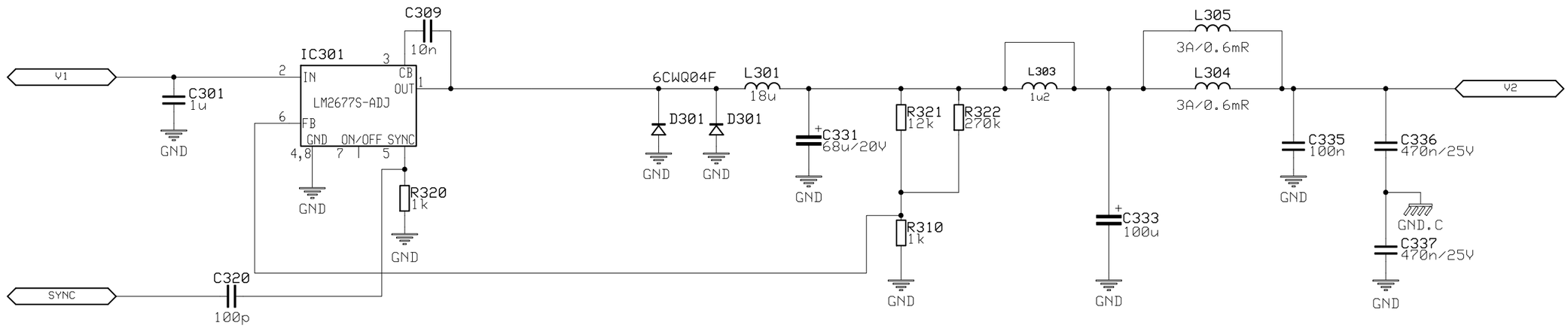


| | | | | |
|---|---|---|---|---|
| Design | Description SEK_Y2 | Included in | Machine | |
| Drawn | TOP! | Release ECO | Release date 040317 | |
| Checked | | Replaces | Design rev. | |
| 4Real AB | | Drawing no. J792030X | | Page 5/7 |

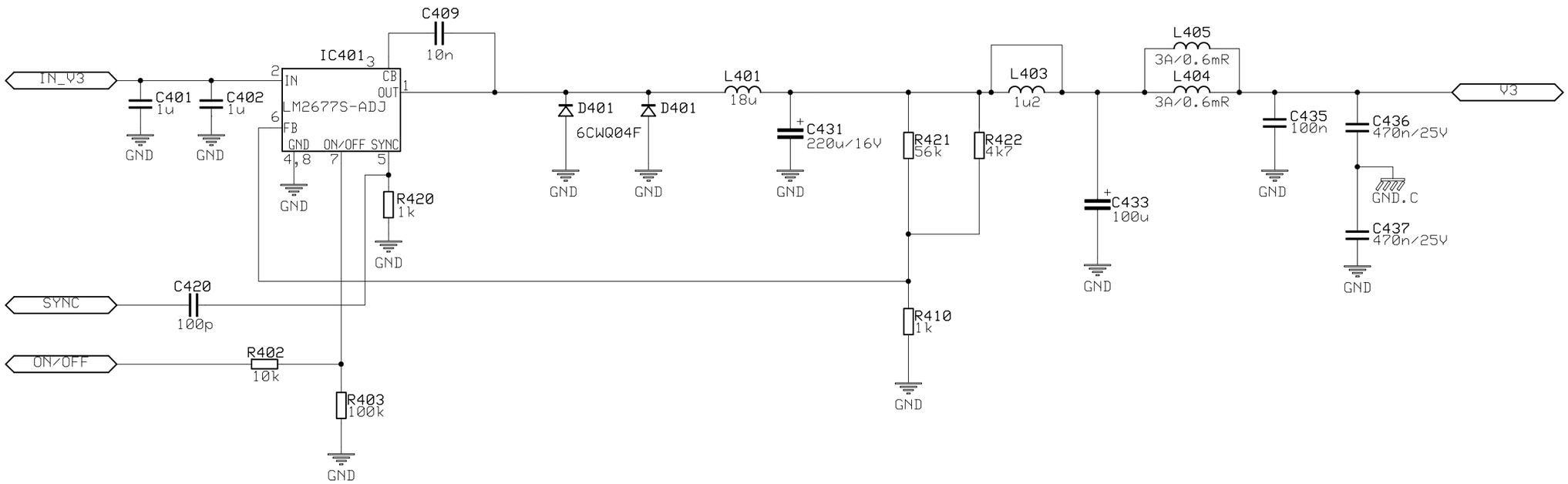


| | | | |
|---|---|---|---|
| Design | Description: SEK_V3 | Included in | Machine |
| Drawn | TOP! | Release ECO | Release date: 040317 |
| Checked | | Replaces | Design rev. |
| 4Real AB | | Drawing no.: J792030X | Page: 6/7 |

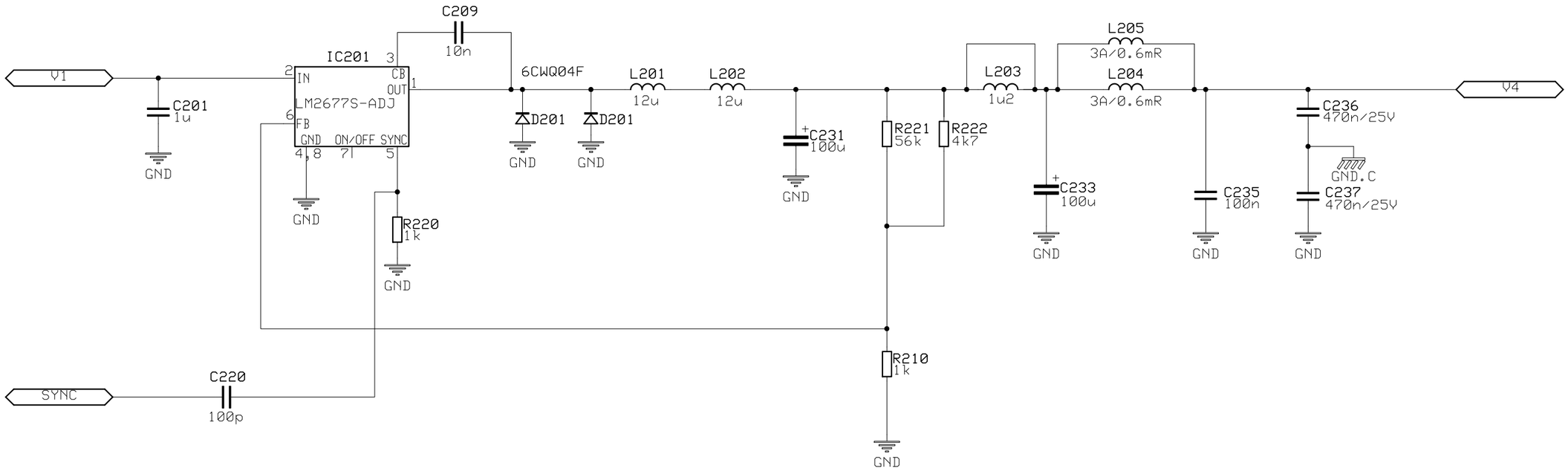


| | | | | |
|---|---|---|---|---|
| Design | Description SEK_V4 | Included in | Machine | |
| Drawn | TOP! | Release ECO | Release date 040317 | |
| Checked | | Replaces | Design rev. | |
| 4Real AB | | Drawing no. J792030X | Page 7/7 | |

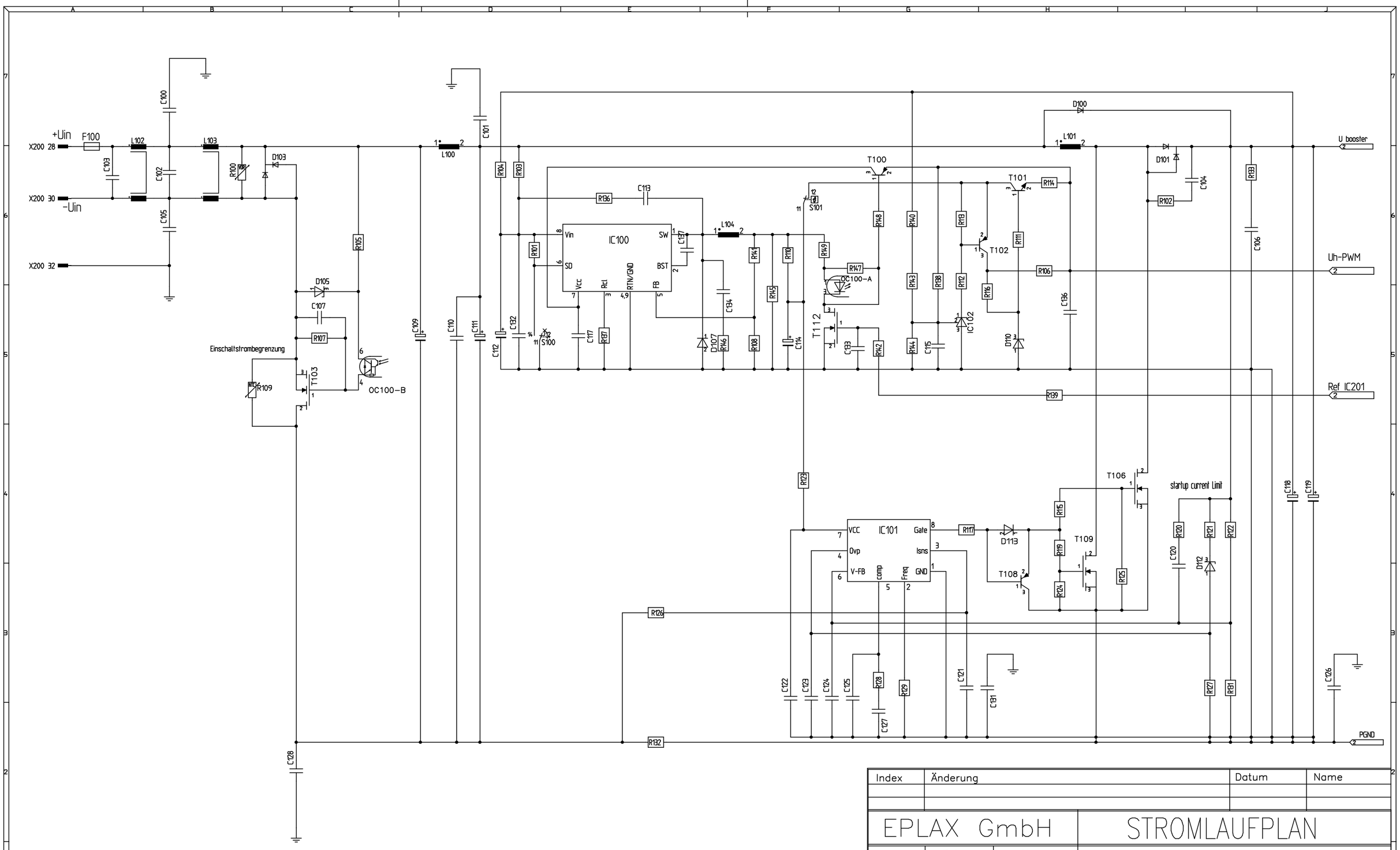


| Index | Änderung | Datum | Name |
|---|---|---|---|
| | | | |
| | | | |

EPLAX GmbH

STROMLAUFPLAN

| | Datum | Name |
|---|---|---|
| Bearb. | 21.11.2007 | Dillon |
| Gepr. | | Schnipper |
| EQ(A) | | |

GB106-3 Booster

894-030631A-10

Blatt 1

Datei: sb173 Datum: 27.11.2007 Bl. 2

VERTRAULICH
Der Inhalt der Unterlagen ist geistiges Eigentum und Betriebsgeheimnis der Firma EPLAX GmbH. Die Weitergabe und Zugänglichmachung der Unterlagen oder der Inhalte, auch nur auszugsweise, bedürfen der ausdrücklichen Zustimmung der Eigentümerin ( §§ 17-20 UWG; §§ 97-100 UrhG; §§ 823, 826 BGB; § 3, Abs. 4, Nr.1 PatG; § 1, Abs. 2 GebmG )

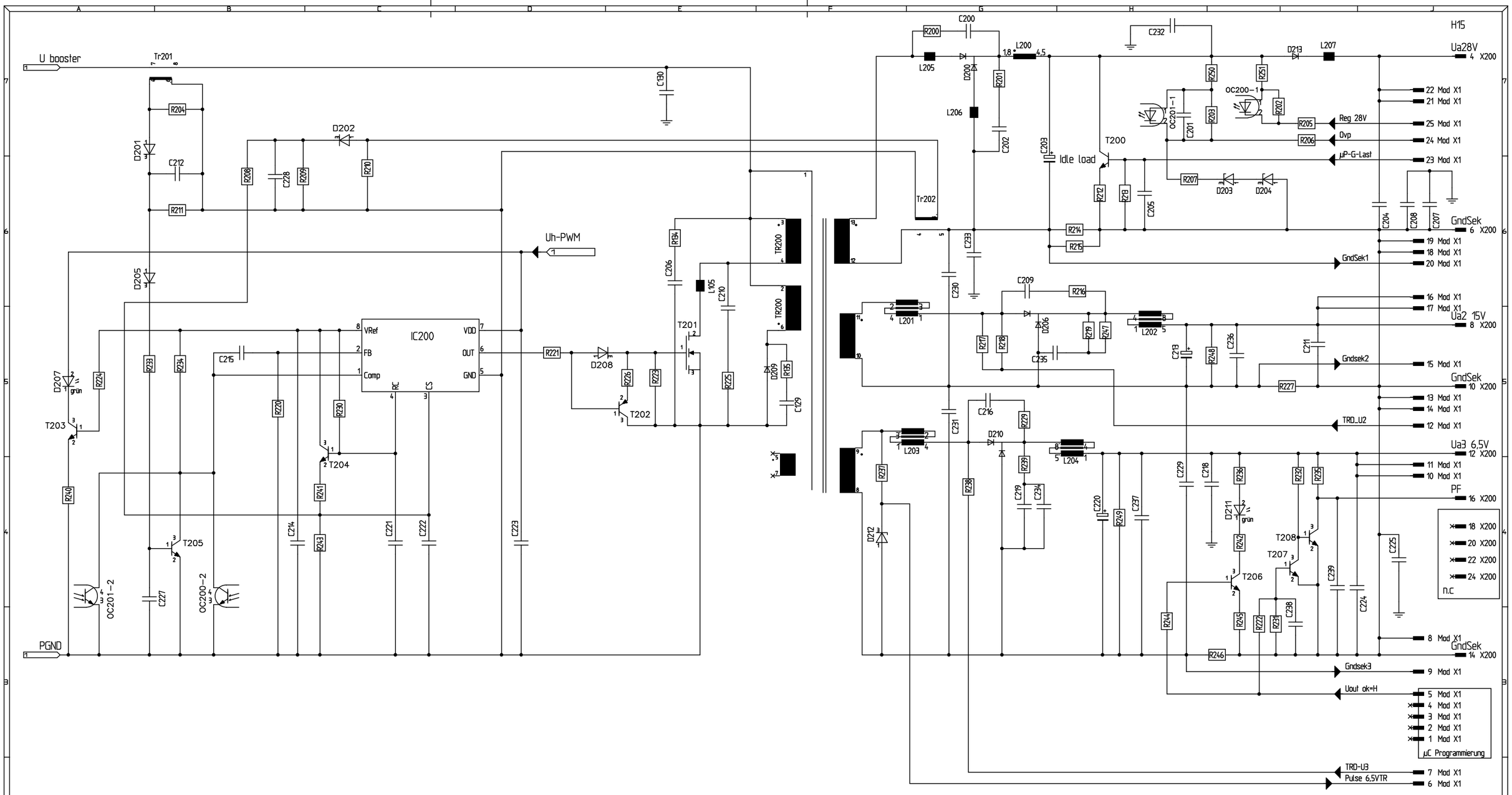


| Index | Änderung | Datum | Name |
|---|---|---|---|
| | | | |
| | | | |

EPLAX GmbH

STROMLAUFPLAN

| | Datum | Name |
|---|---|---|
| Bearb. | 21.11.2007 | Dillon |
| Gepr. | | Schnipper |
| EQ(A) | | |

GB106-3 PWM

894-030631A-10

Blatt 2

Datei: sb173 Datum: 27.11.2007 Bl. 2

VERTRAULICH
Der Inhalt der Unterlagen ist geistiges Eigentum und Betriebsgeheimnis der Firma EPLAX GmbH. Die Weitergabe und Zugänglichmachung der Unterlagen oder der Inhalte, auch nur auszugsweise, bedürfen der ausdrücklichen Zustimmung der Eigentümerin ( §§ 17-20 UWG; §§ 97-100 UrhG; §§ 823, 826 BGB; § 3, Abs. 4, Nr.1 PatG; § 1, Abs. 2 GebmG )

Utan vårt uttryckliga tillstånd får denna handling icke utlämnas till obehöriga eller kopieras.Ej heller får dess innehåll delgivas obehöriga eller utnyttjas.All upphovsrätt till handlingens innehåll förblir vår liksom all rätt,om patent eller mönsterskydd erhålles. Överträdelse medför skadeståndsansvar.

Copying of this document,and giving it to others and the use or communication of the contents thereof,are forbidden whithout express authority.Offenders are liable to the payement of damages.All rights are reserved in the event of the grant of a patent or the registration of a utility model or design.

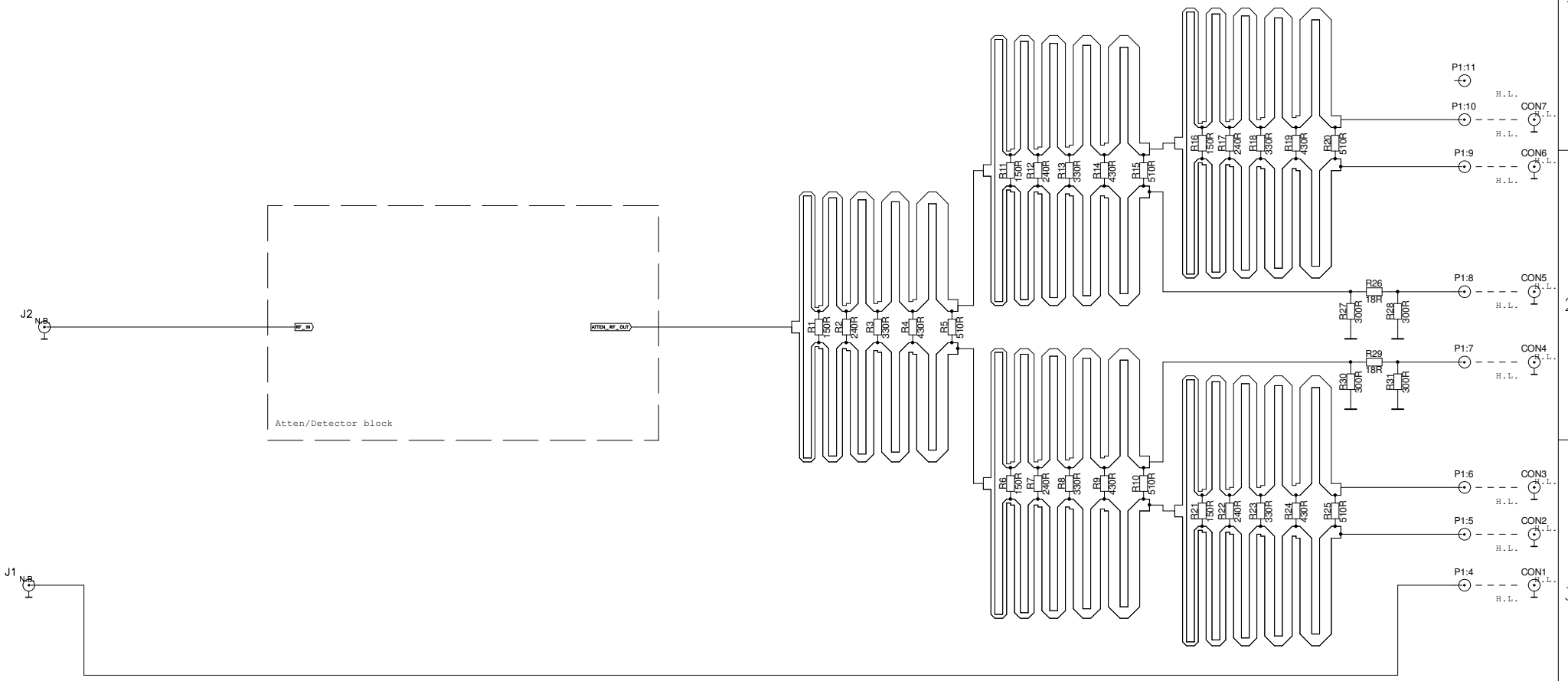


| | |
|---|---|
| Benämning / Title | OMUS 1:6 |
| Artikelnr. / Articlenr. | K1282030D |
| Datum / Date | 090524 |
| Fastlagt av / Design approved | |
| Dok.ansv/Godkänd / Doc.respon/approved | |
| Uppgjord / Drawn by | J.E. |
| Sida / Sheet | 3 Av / Of 3 |
| ACCEL Schematic | |
| A2 | COPYRIGHT © BY AVITEC AB |

AVITEC

Utan vårt uttryckliga tillstånd får denna handling icke utlämnas till obehöriga eller kopieras.Ej heller får dess innehåll delgivas obehöriga eller utnyttjas.All upphovsrätt till handlingens innehåll förblir vår liksom all rätt,om patent eller mönsterskydd erhålles. Överträdelse medför skadeståndsansvar.

Copying of this document,and giving it to others and the use or communication of the contents thereof,are forbidden whithout express authority.Offenders are liable to the payement of damages.All rights are reserved in the event of the grant of a patent or the registration of a utility model or design.

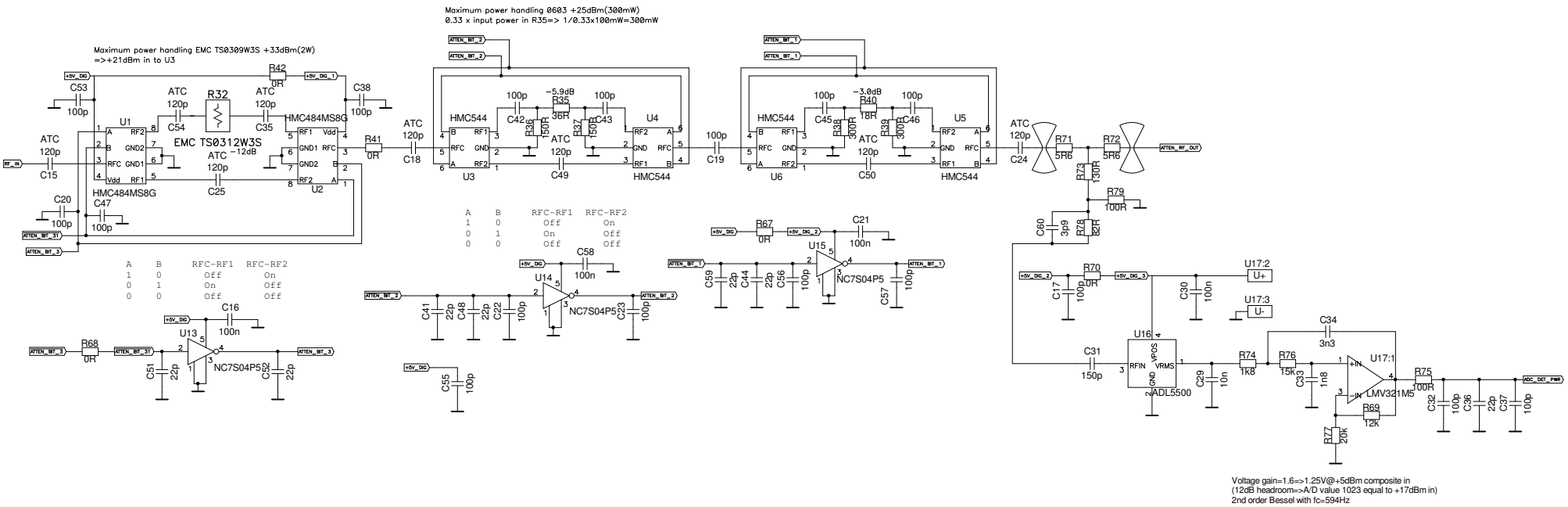


| | |
|---|---|
| Benämning / Title | OMUS 1:6 |
| Artikelnr. / Articlenr. | K1282030D |
| Datum / Date | 090524 |
| Faktaansvarig / Design approved | |
| Dok.ansv/Godkänd / Doc.respon/approved | |
| Uppgjord / Drawn by | J.E. |
| Sida / Sheet | 2 Av / Of 3 |
| ACCEL Schematic | |
| A2 | COPYRIGHT © BY AVITEC AB |

AVITEC

Utan vårt uttryckliga tillstånd får denna handling icke utlämnas till obehöriga eller kopieras.Ej heller får dess innehåll delgivas obehöriga eller utnyttjas.All upphovsrätt till handlingens innehåll förblir vår liksom all rätt,om patent eller mönsterskydd erhålles. Överträdelse medför skadeståndsansvar.

Copying of this document,and giving it to others and the use or communication of the contents thereof,are forbidden whithout express authority.Offenders are liable to the payement of damages.All rights are reserved in the event of the grant of a patent or the registration of a utility model or design.

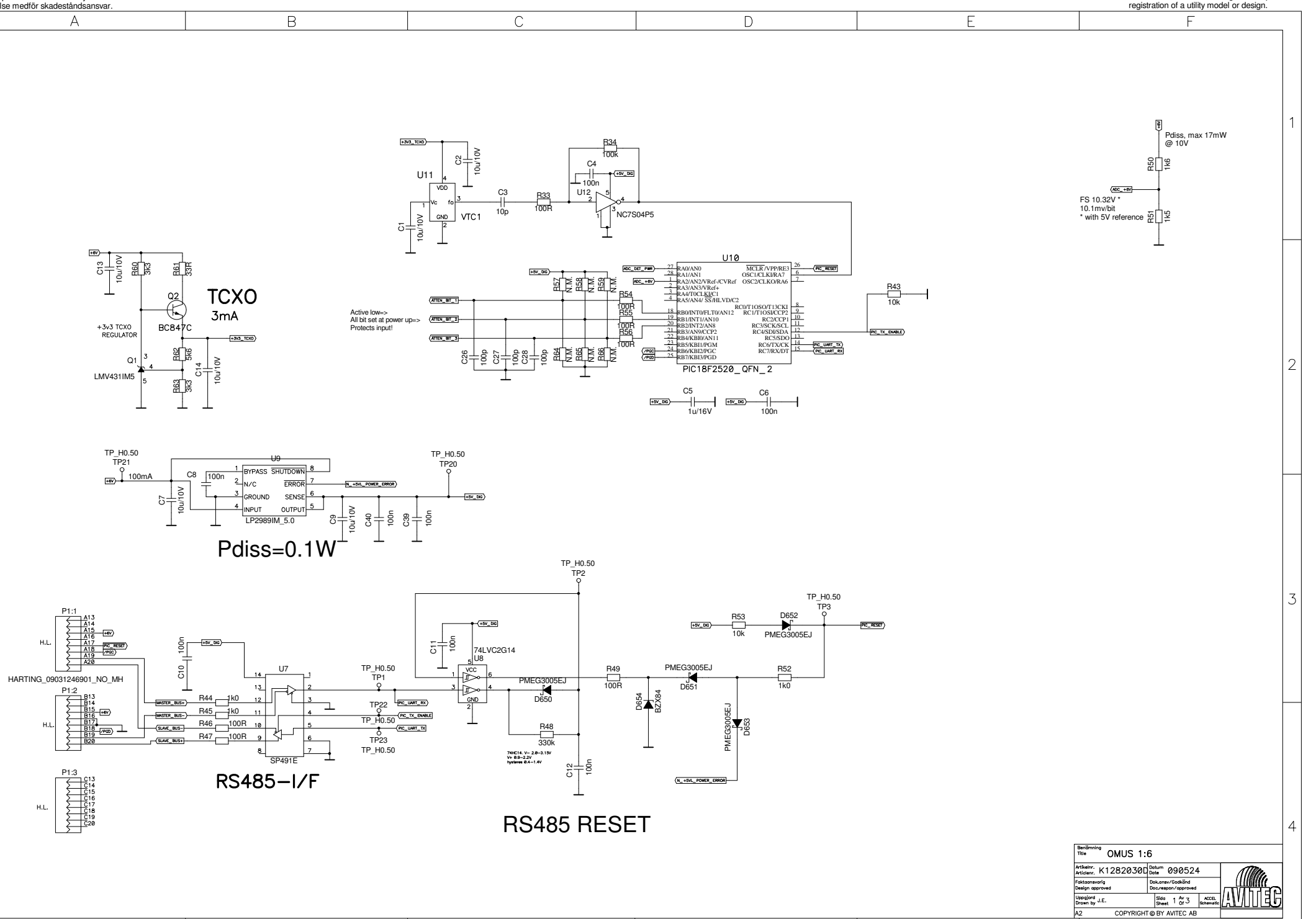


| | |
|---|---|
| Benämning / Title | OMUS 1:6 |
| Artikelnr. / Articlenr. | K1282030D |
| Datum / Date | 090524 |
| Fastlagt av / Design approved | |
| Dok.ansv / Godkänd / Document approved | |
| Uppgjord / Drawn by | J.E. |
| Sida / Sheet | 1 Av / Of 3 |
| ACCEL Schematic | |
| A2 | COPYRIGHT © BY AVITEC AB |

AVITEC

Utan vårt uttryckliga tillstånd får denna handling icke utlämnas till obehöriga eller kopieras.Ej heller får dess innehåll delgivas obehöriga eller utnyttjas.All upphovsrätt till handlingens innehåll förblir vår liksom all rätt,om patent eller mönsterskydd erhålles. Överträdelse medför skadeståndsansvar.

Copying of this document,and giving it to others and the use or communication of the contents thereof,are forbidden whithout express authority.Offenders are liable to the payement of damages.All rights are reserved in the event of the grant of a patent or the registration of a utility model or design.

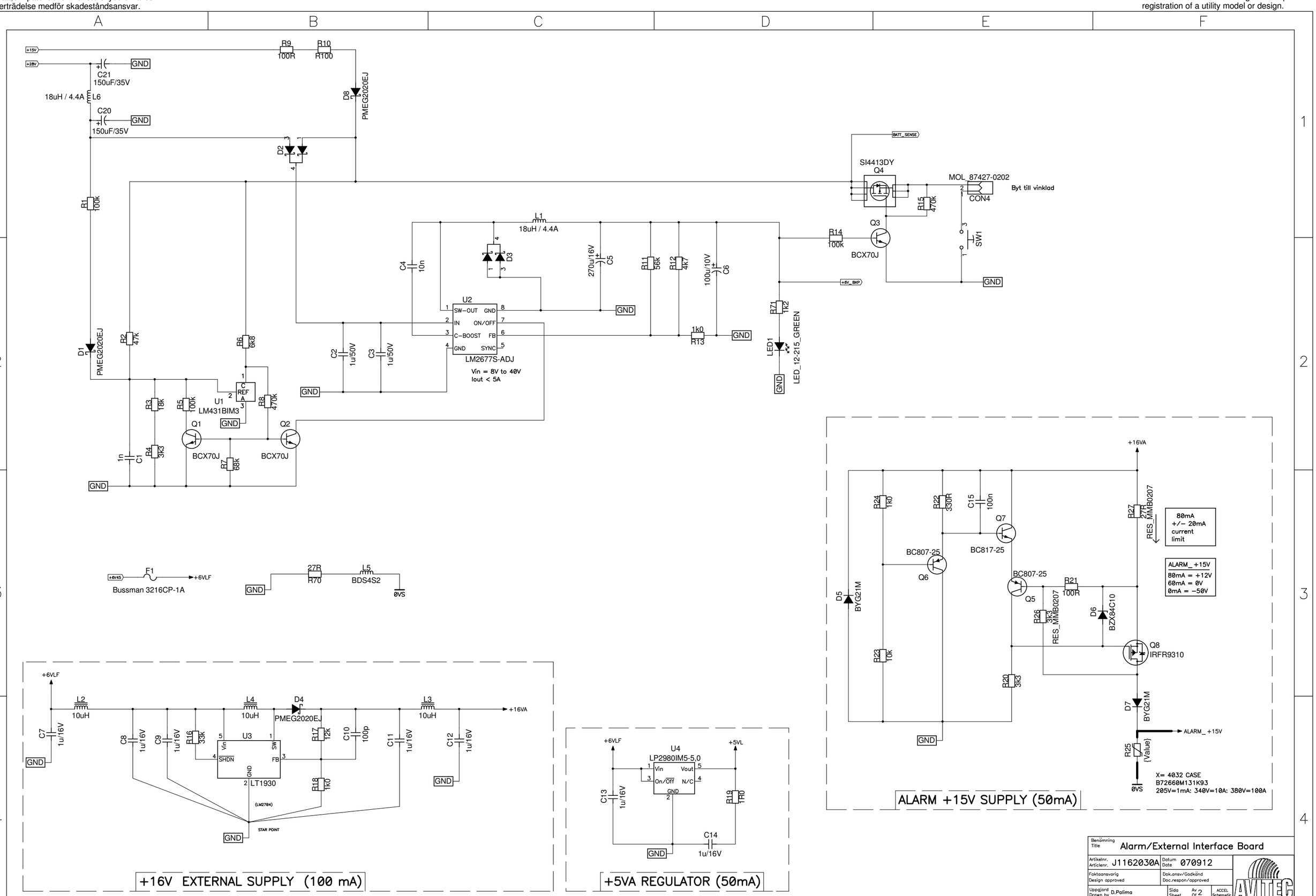


| | |
|---|---|
| Benämning / Title | Alarm/External Interface Board |
| Artikelnr. / Articlenr. | J1162030A |
| Datum / Date | 070912 |
| Faktaansvarig / Design approved | |
| Dok.ansv/Godkänd / Doc.respon/approved | |
| Uppgjord / Drawn by | D.Palima |
| Sida / Sheet | Av / Of 2 |
| ACCEL Schematic | |
| A2 | COPYRIGHT © BY AVITEC AB |

Utan vårt uttryckliga tillstånd får denna handling icke utlämnas till obehöriga eller kopieras.Ej heller får dess innehåll delgivas obehöriga eller utnyttjas.All upphovsrätt till handlingens innehåll förblir vår liksom all rätt,om patent eller mönsterskydd erhålles. Överträdelse medför skadeståndsansvar.

Copying of this document,and giving it to others and the use or communication of the contents thereof,are forbidden whithout express authority.Offenders are liable to the payement of damages.All rights are reserved in the event of the grant of a patent or the registration of a utility model or design.

Byt kontakten till Mentor 4pol+5pol+6pol kontakter

## EXTERNAL CONNECTOR J2

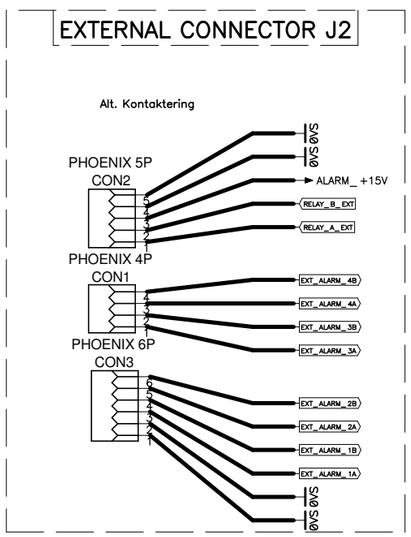


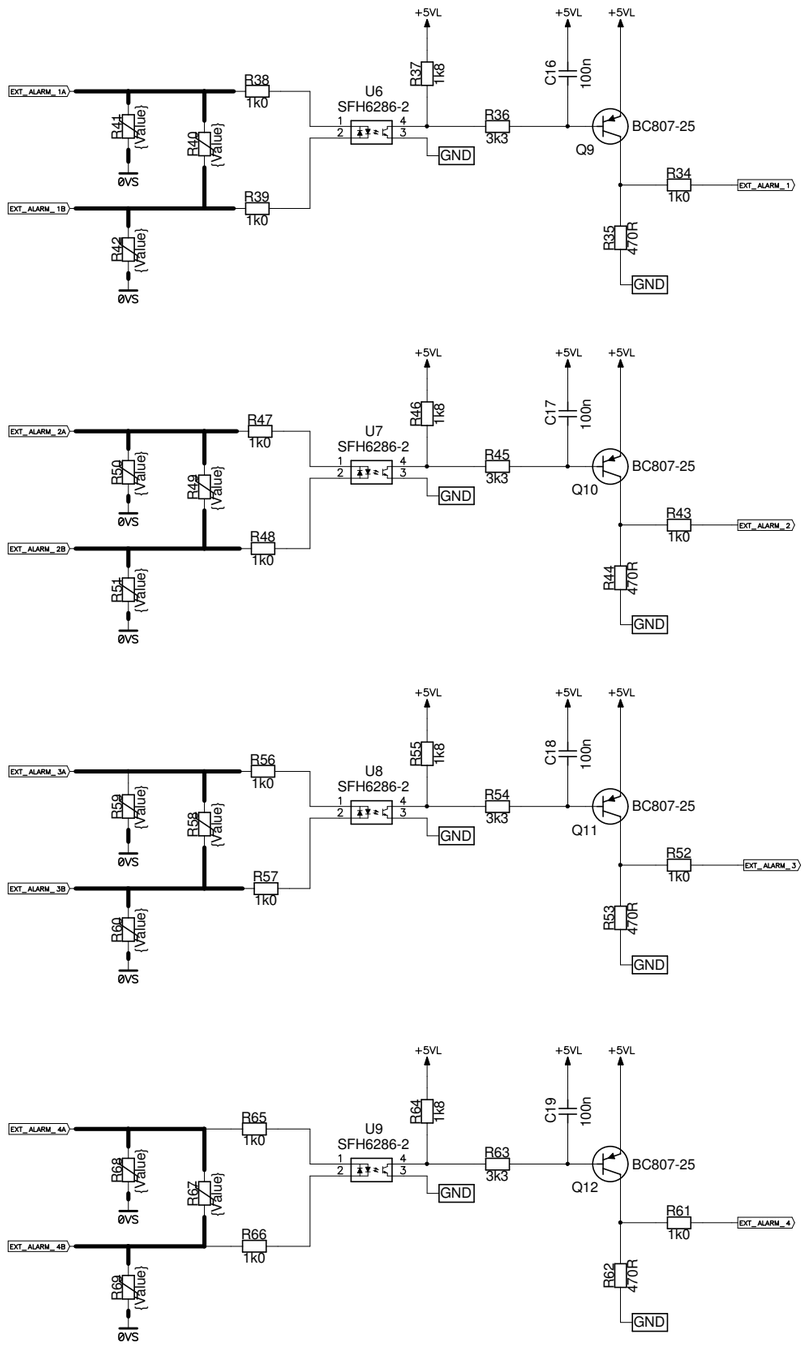


X= 4032 CASE
B72660M131K93
205V=1mA: 340V=10A: 380V=100A

## ALARM SIGNALS

(1) 0V to 1.0V = OFF
(2) 4.5V to 64V = ON
(3) DUAL POLARITY
(4) INPUT 1A to 1B
(5) INPUT 2A to 2B
(6) INPUT 3A to 3B
(7) INPUT 4A to 4B

## EXTERNAL ALARMS

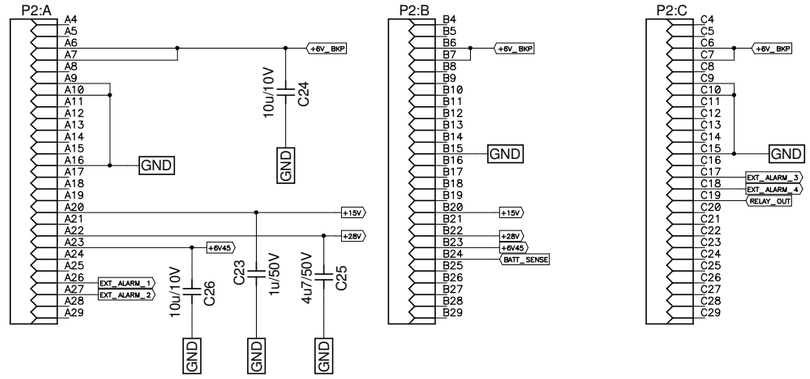


Kolla CAD-symbol pinning

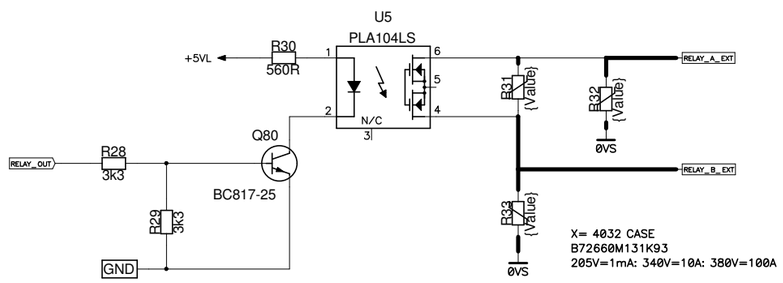


## EXTERNAL RELAY (100mA) (50R) (+ – 400V 1mS)

| | |
|---|---|
| Benämning / Title | Alarm/External Interface Board |
| Artikelnr. / Articlenr. J1162030A | Datum / Date 070912 |
| Faktaansvarig / Design approved | Dok.ansv/Godkänd / Doc.respon/approved |
| Uppgjord / Drawn by D.Palima | Sida / Sheet 2 Av / Of 2 — ACCEL Schematic |
| A2 | COPYRIGHT © BY AVITEC AB |

AVITEC