D.6.0 Schematic Diagram

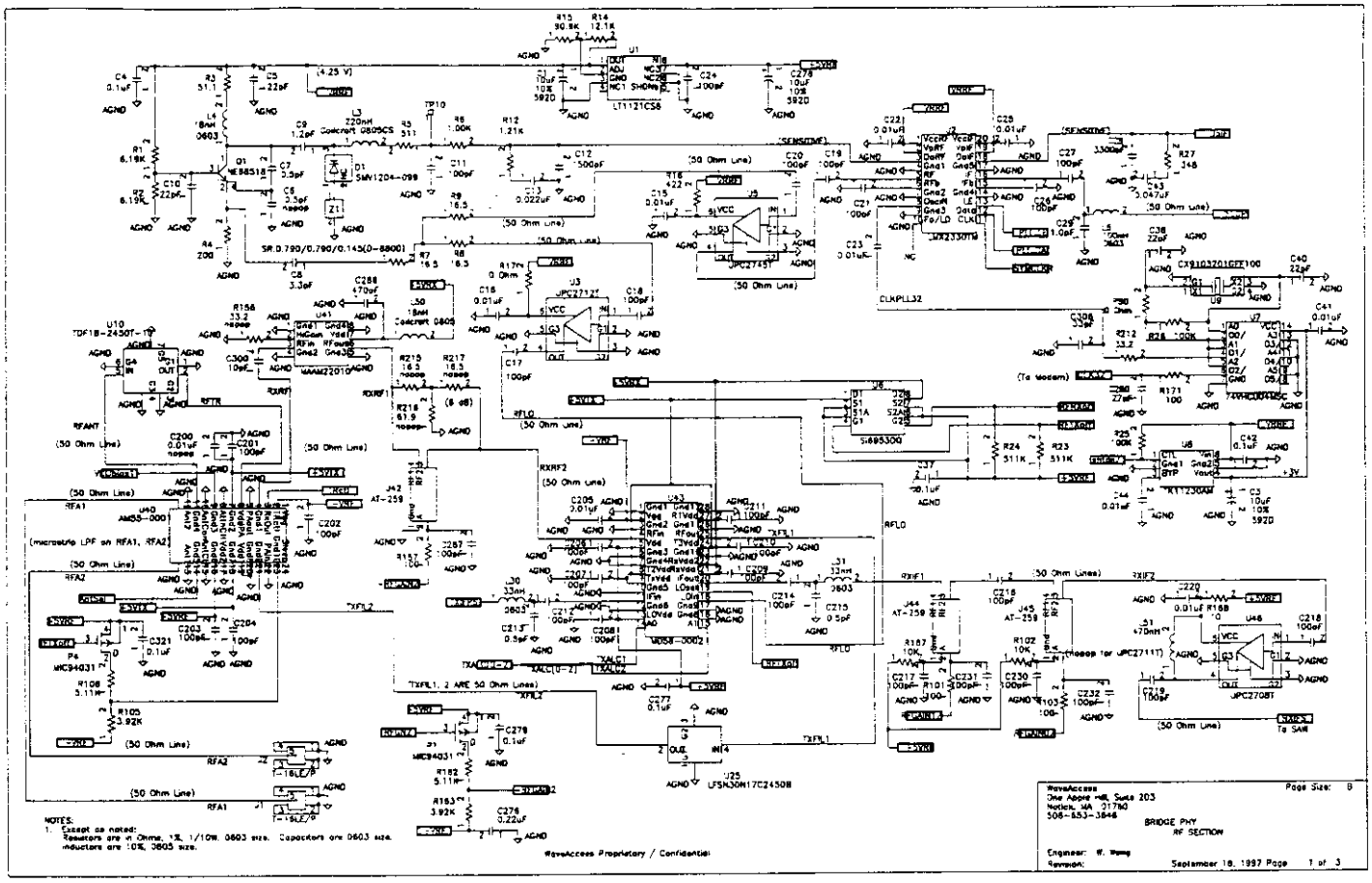
WaveAccess
One Apple Hill, Suite 203
Natick, MA 01760
508-653-3846
BRIDGE PHY
RF SECTION
Engineer: W. Wang
Revision:
September 18, 1997 Page 1 of 3
Page Size: B
NOTES:
1. Except as noted:
Resistors are in Ohms, 1%, 1/10W, 0603 size. Capacitors are 0603 size.
Inductors are 10%, 0805 size.
WaveAccess Proprietary / Confidential

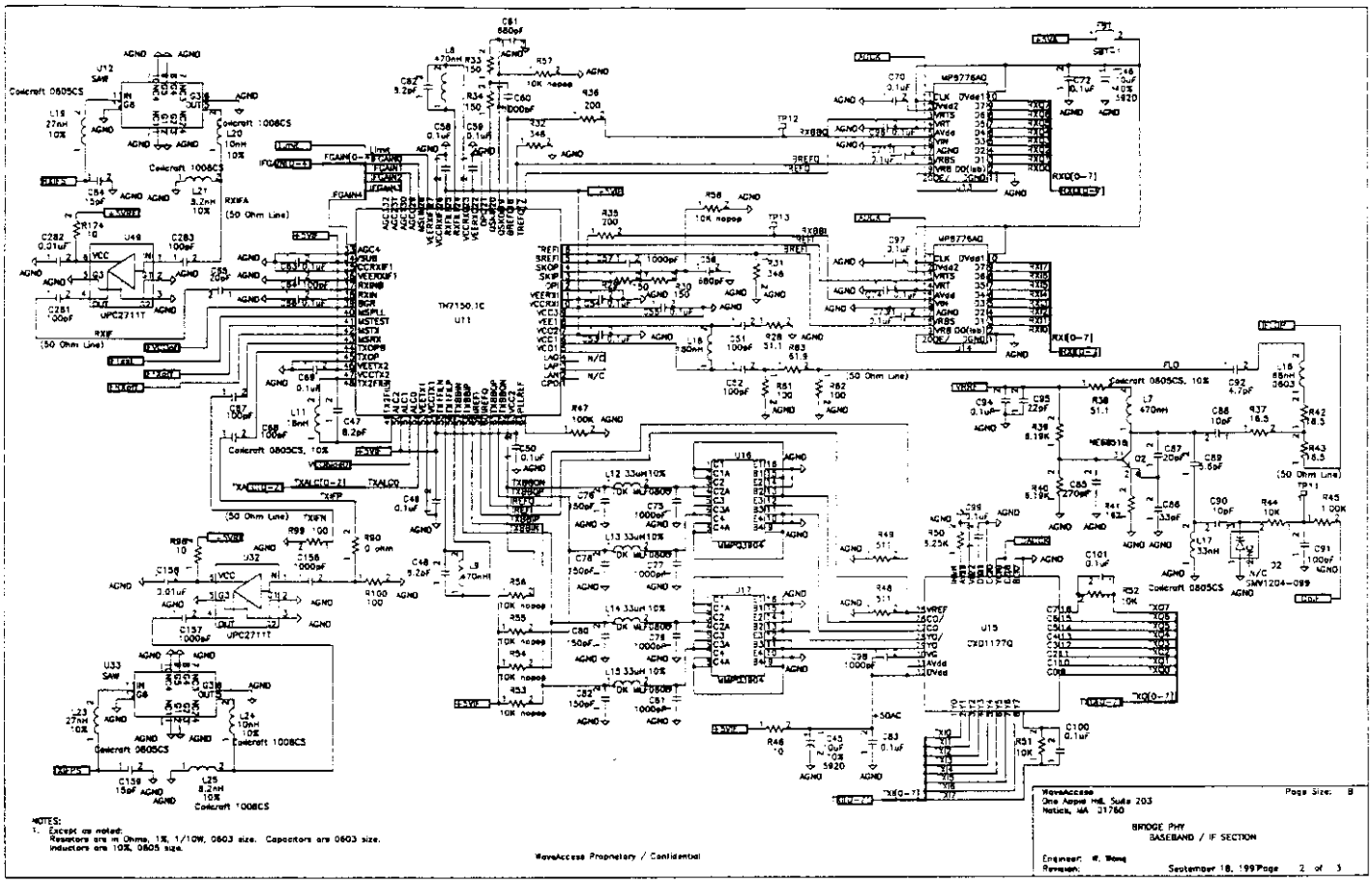

NOTES:
1. Except as noted:
   Resistors are in Ohms, 1%, 1/10W, 0603 size. Capacitors are 0603 size.
   Inductors are 10%, 0805 size.

WaveAccess Proprietary / Confidential

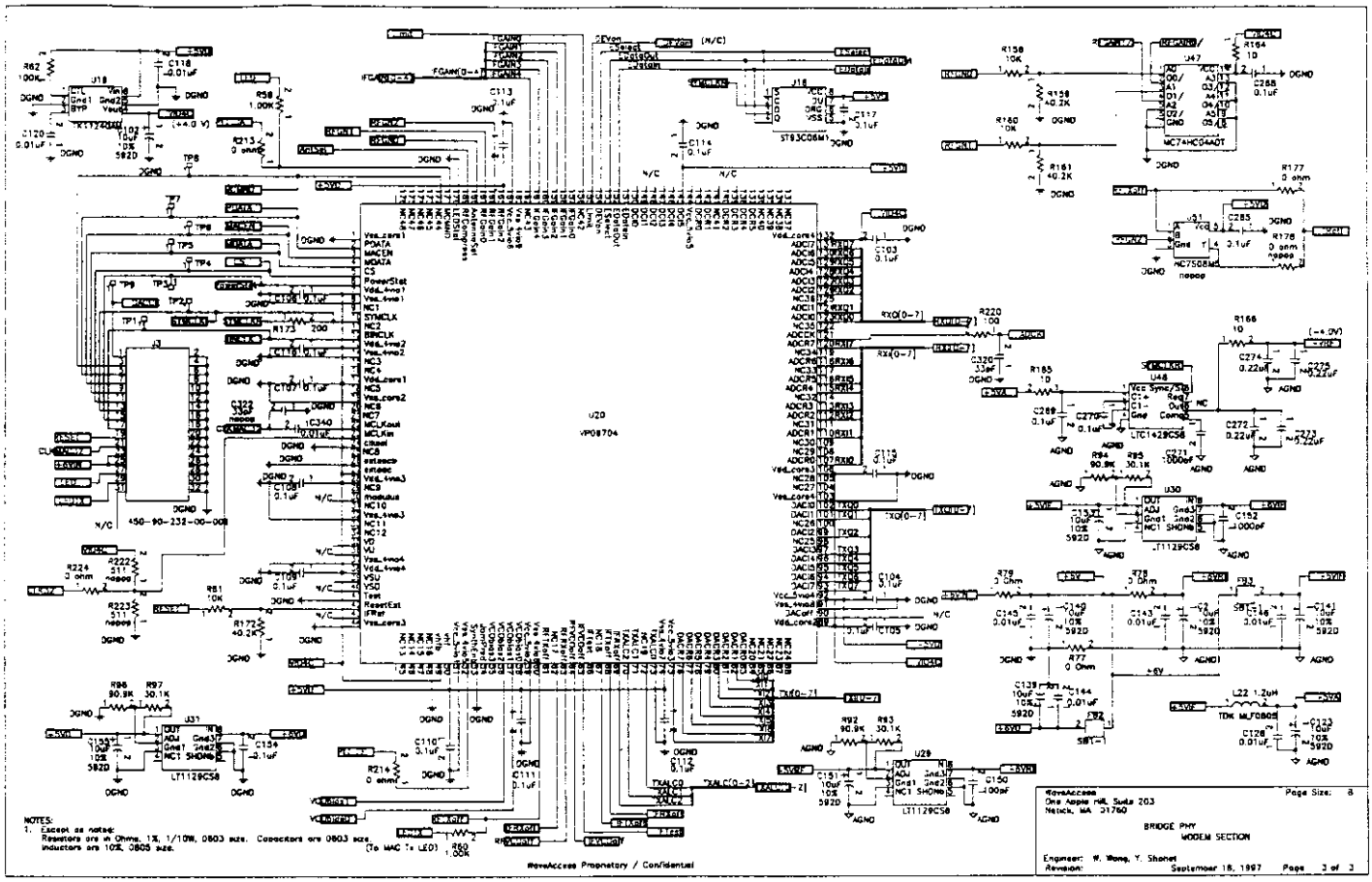
U20
VP08704
NOTES:
1. Except as noted:
Resistors are in Ohms, 1%, 1/10W, 0803 size. Capacitors are 0803 size.
Inductors are 10%, 0805 size.
(To MAC Tx LED)
WaveAccess Proprietary / Confidential
WaveAccess
One Apple Hill, Suite 203
Natick, MA 01760
Page Size: 8
BRIDGE PHY
MODEM SECTION
Engineer: W. Wong, Y. Shonet
Revision:
September 18, 1997
Page 3 of 3

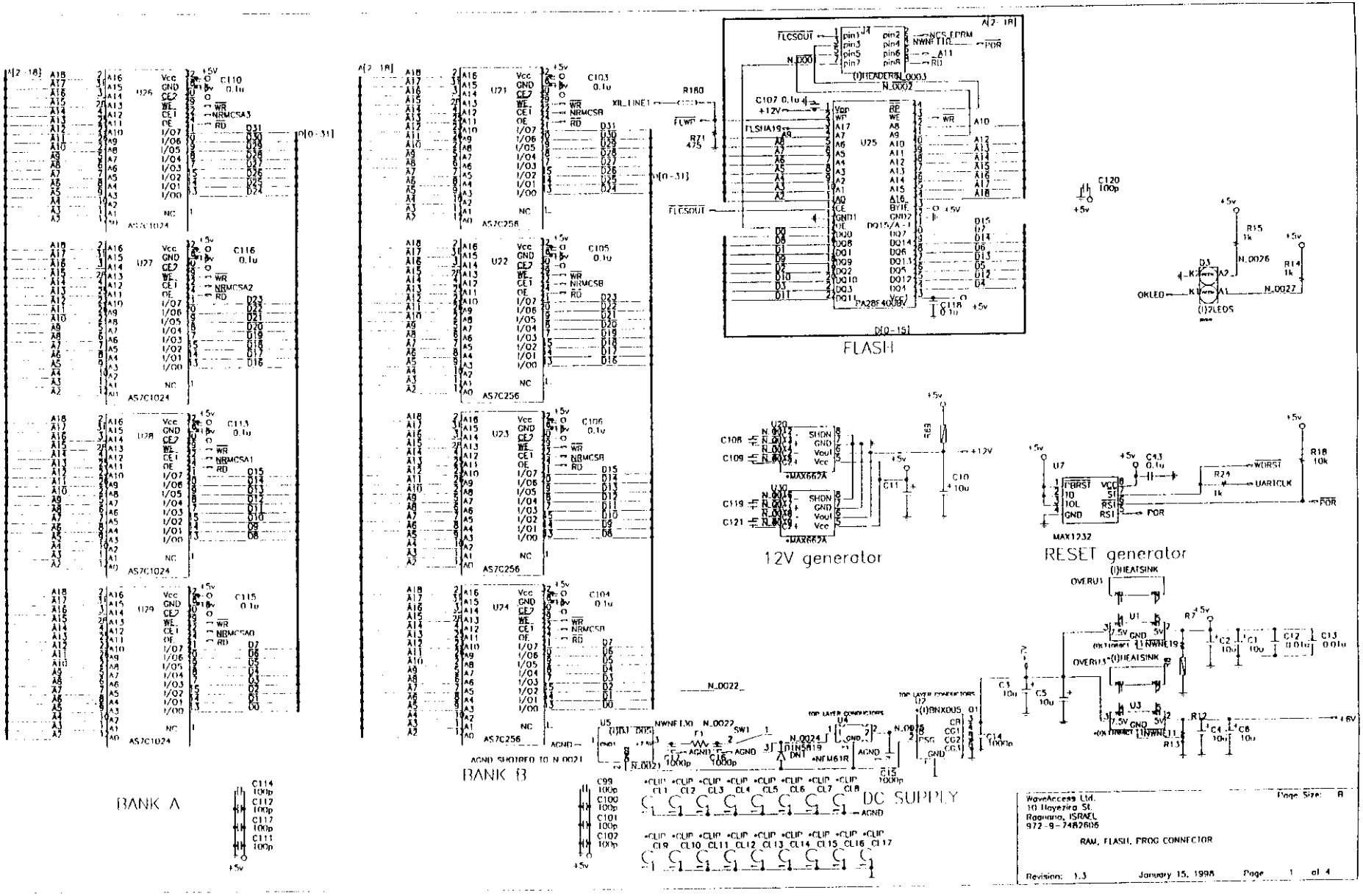
BANK A
BANK B
FLASH
12V generator
RESET generator
DC SUPPLY
WaveAccess Ltd.
10 Hayezira St.
Ramana, ISRAEL
972-9-7482606
RAM, FLASH, PROG CONNECTOR
Page Size: B
Revision: 1.3
January 15, 1998
Page 1 of 4

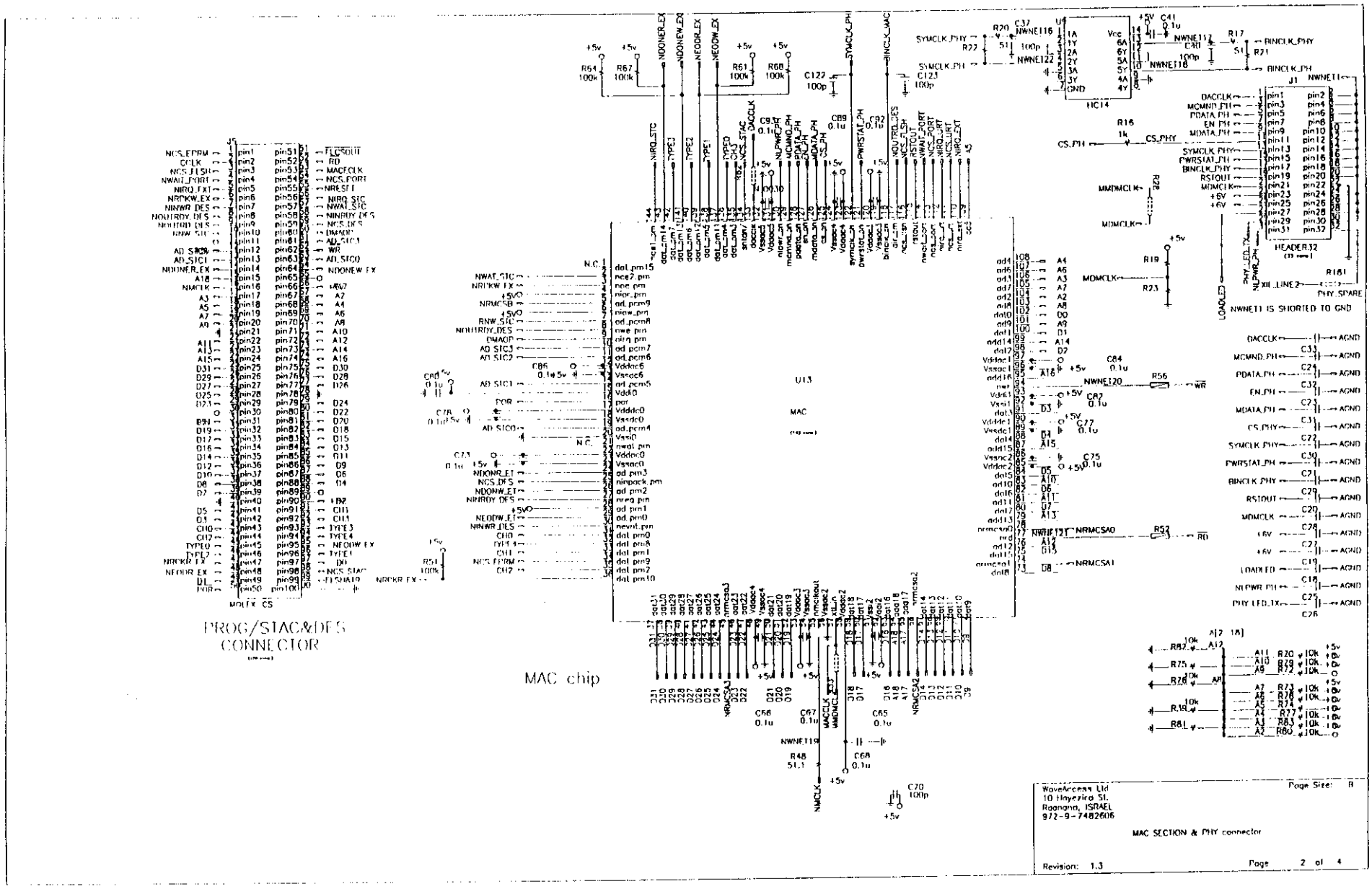
PROG/STAC&DES CONNECTOR
MAC chip
U13
MAC
HC14
J1
HEADER32
NWNET1 IS SHORTED TO GND
WaveAccess Ltd
10 Hayezira St.
Raanana, ISRAEL
972-9-7482606
Page Size: B
MAC SECTION & PHY connector
Revision: 1.3
Page 2 of 4

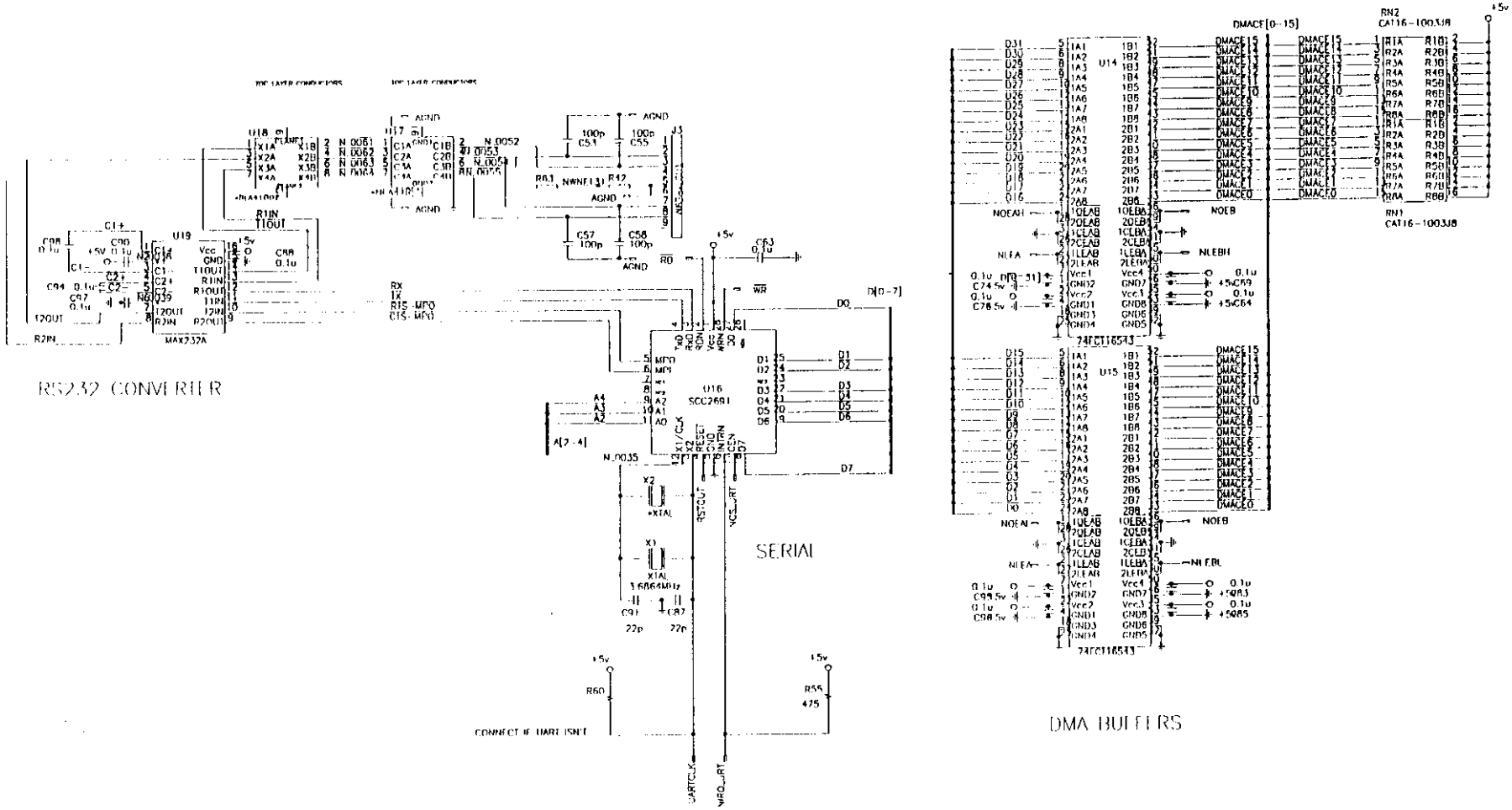

WaveAccess Ltd.
10 Hayezira St.
Raanana, ISRAEL
972-9-7402606

Page Size: B

SERIALS & DMA buffers

Revision: 1.3

Page 3 of 4

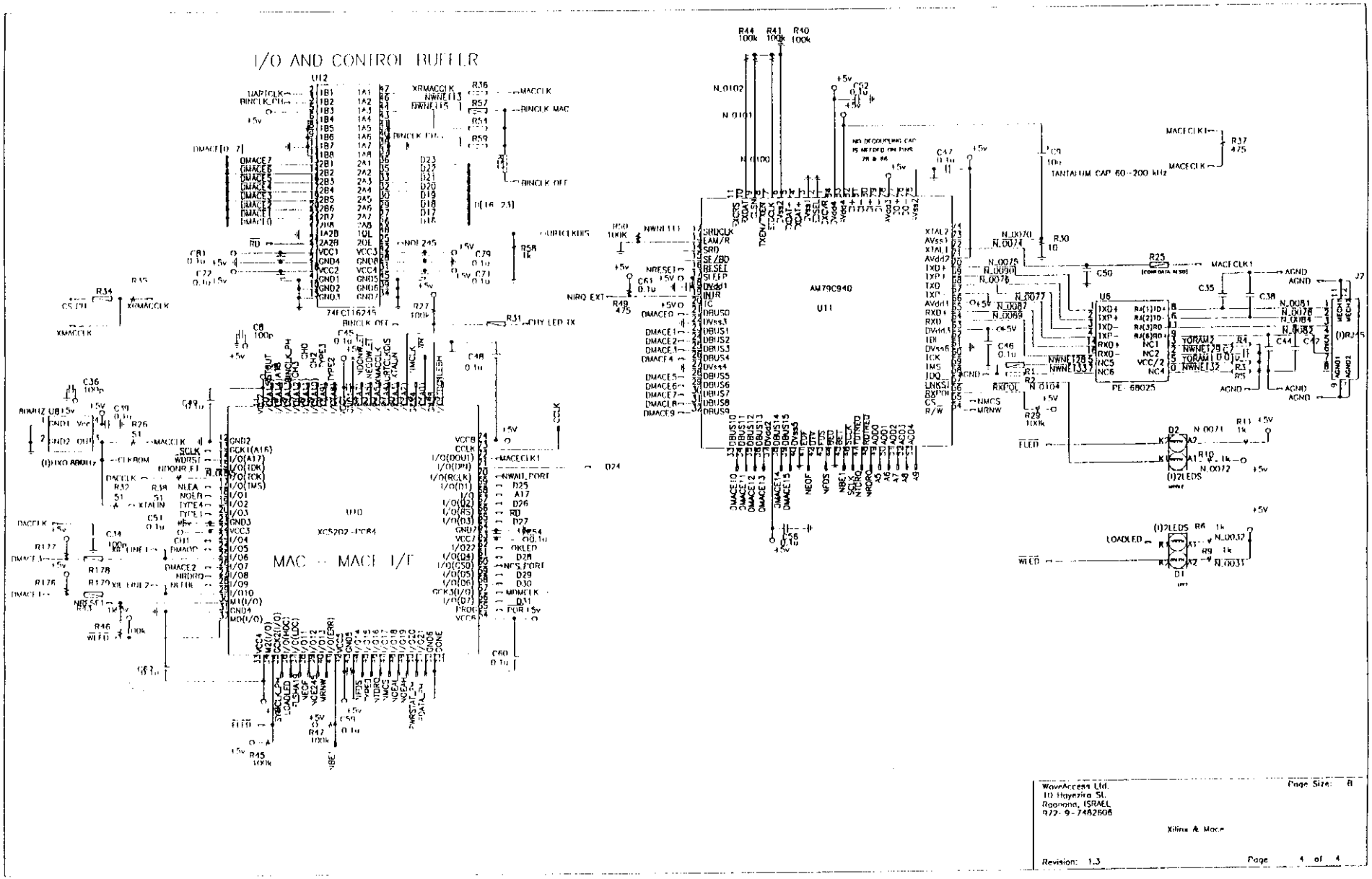

WowAccess Ltd.
10 Hayezira St.
Raanana, ISRAEL
972-9-7482608

Page Size: B

Xilinx & Mace

Revision: 1.3

Page 4 of 4

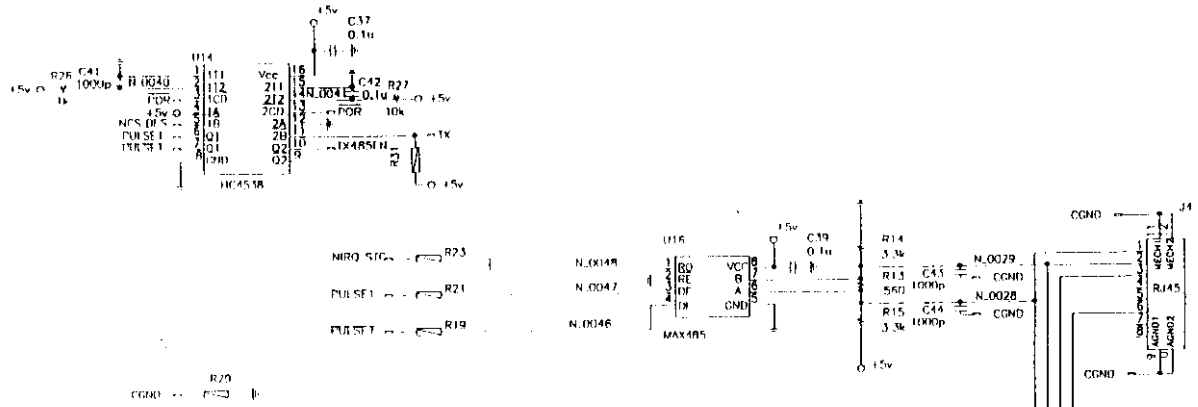

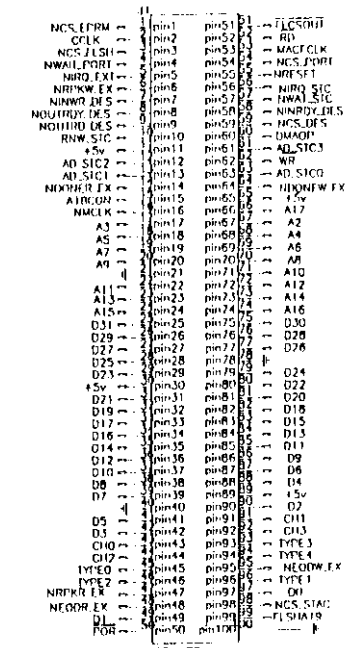

Mates with AP

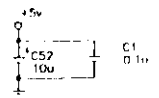

Wave Access Ltd.
10 Hayzira St. P.O. Box 2473
Ramatna 43663, ISRAEL
1972-9-7482608

Page Size: B

Sync Balcony

Created by: Baruch Schwarz
Revision: 2.0 July 7, 1997

Page 1 of 1