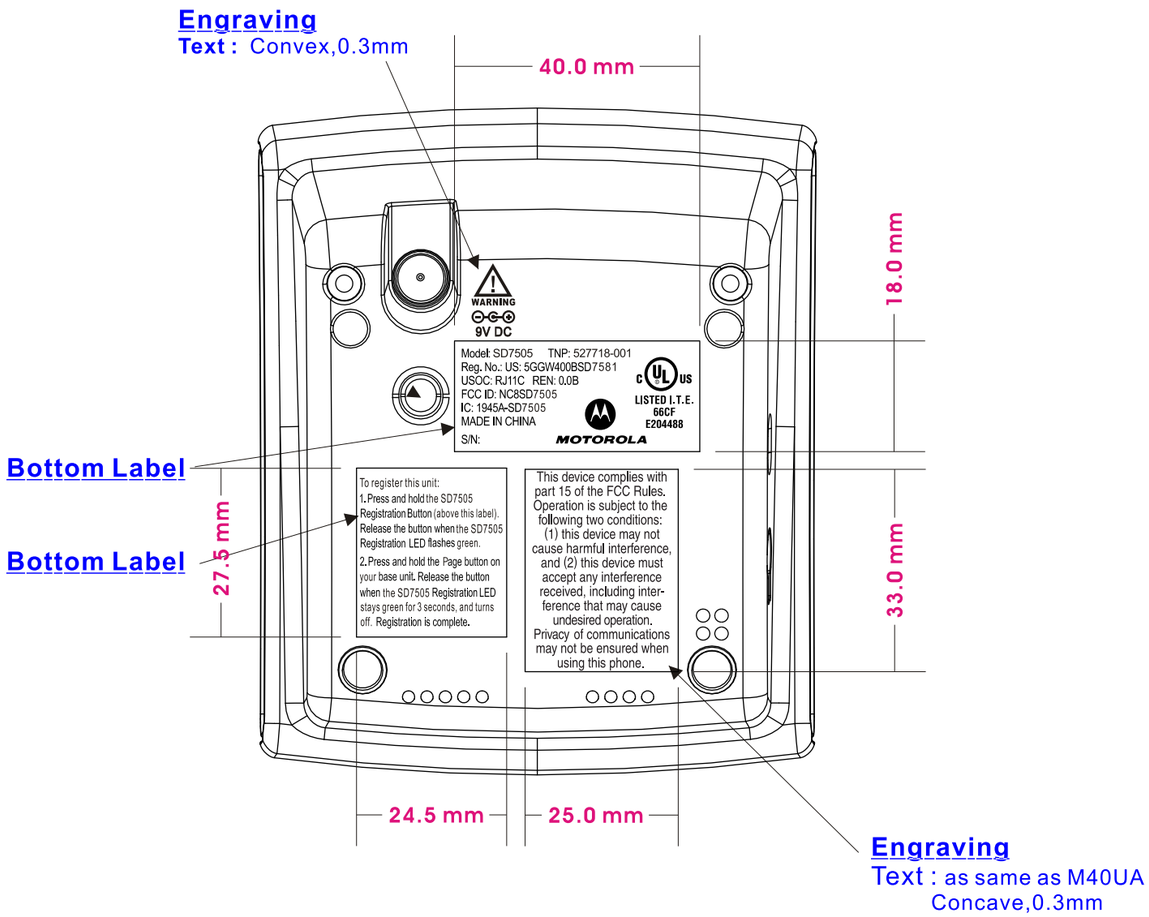

SD7505 CELL DOCK LABEL ARTWORK