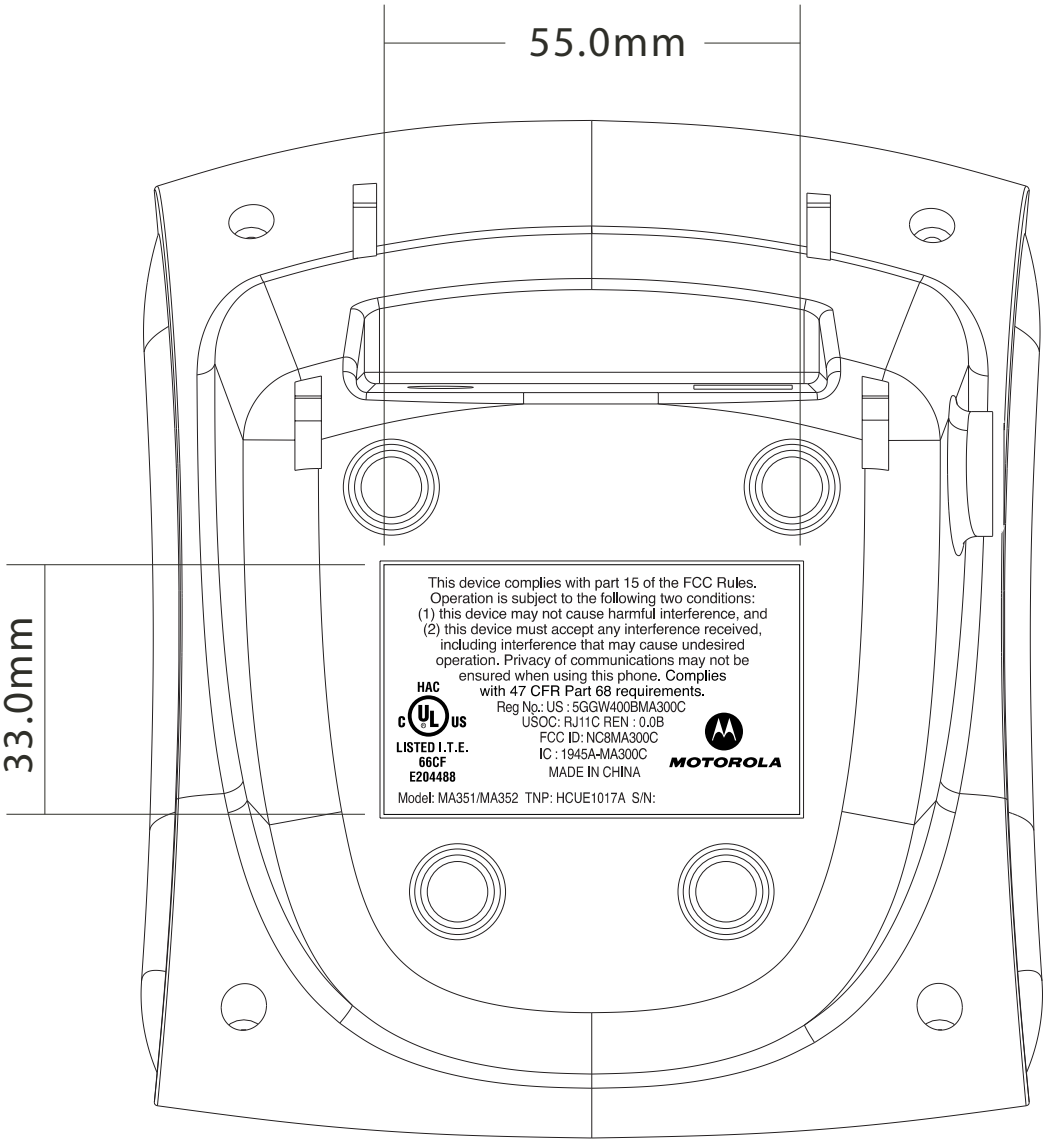

MA351/2C LABEL DRAWING
DATE: 07 MAY 2004