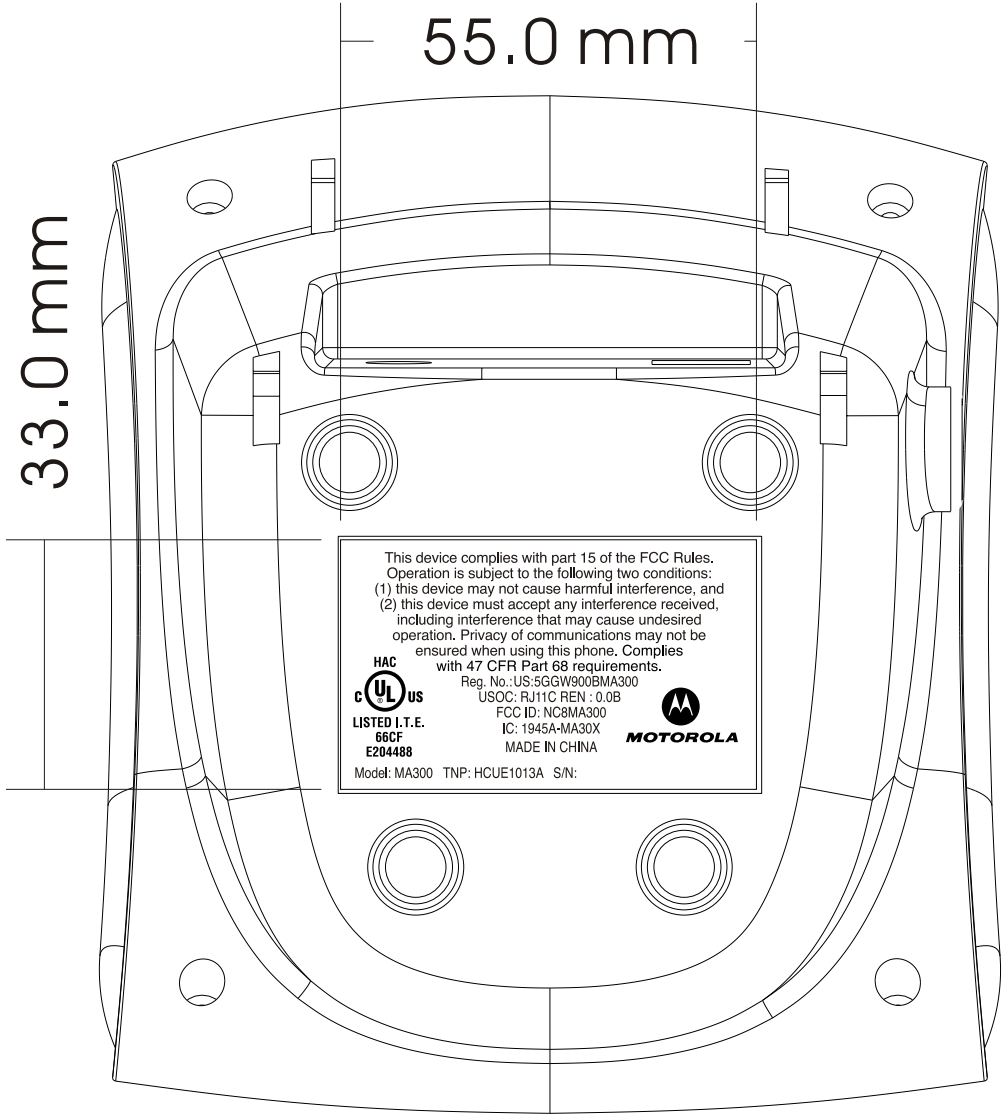
55.0 mm
33.0 mm
This device complies with part 15 of the FCC Rules.
Operation is subject to the following two conditions:
(1) this device may not cause harmful interference, and
(2) this device must accept any interference received,
including interference that may cause undesired
operation. Privacy of communications may not be
ensured when using this phone. Complies
with 47 CFR Part 68 requirements.
HAC
C UL US
LISTED I.T.E.
66CF
E204488
Reg. No.:US:5GGW900BMA300
USOC: RJ11C REN : 0.0B
FCC ID: NC8MA300
IC: 1945A-MA30X
MADE IN CHINA
MOTOROLA
Model: MA300 TNP: HCUE1013A S/N:

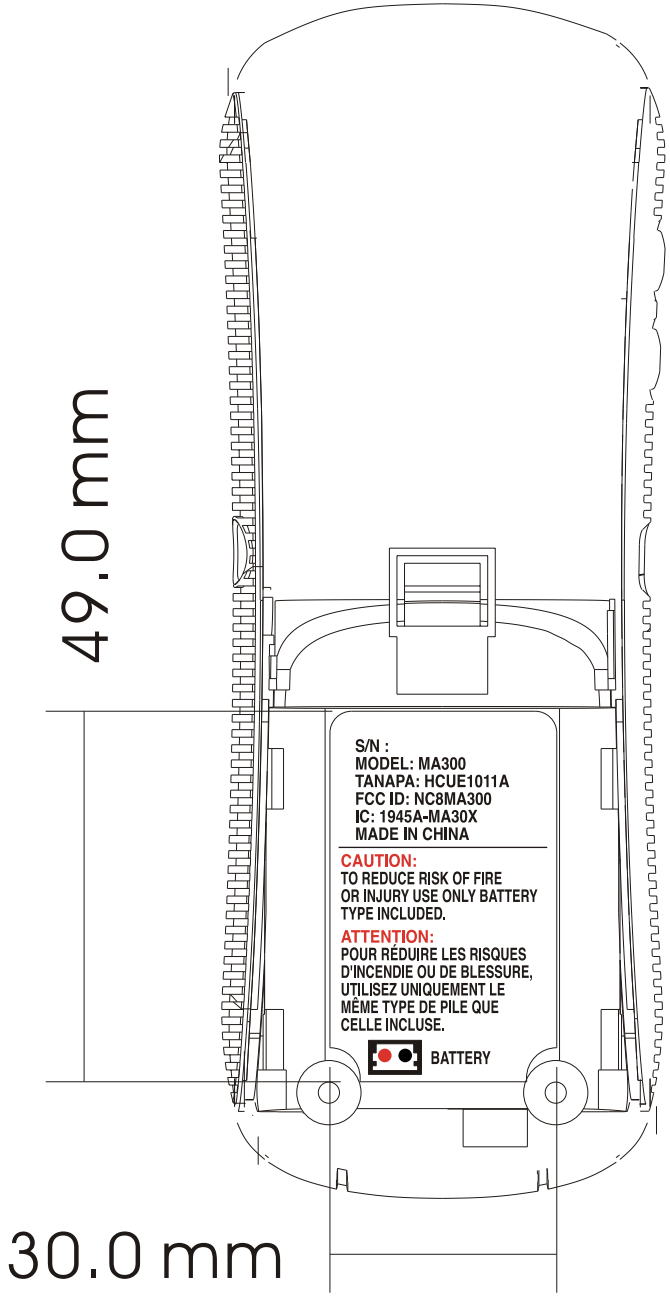
49.0 mm
S/N :
MODEL: MA300
TANAPA: HCUE1011A
FCC ID: NC8MA300
IC: 1945A-MA30X
MADE IN CHINA
CAUTION:
TO REDUCE RISK OF FIRE
OR INJURY USE ONLY BATTERY
TYPE INCLUDED.
ATTENTION:
POUR RÉDUIRE LES RISQUES
D'INCENDIE OU DE BLESSURE,
UTILISEZ UNIQUEMENT LE
MÊME TYPE DE PILE QUE
CELLE INCLUSE.
BATTERY
30.0 mm