Base Label Size: 60mm x 35mm

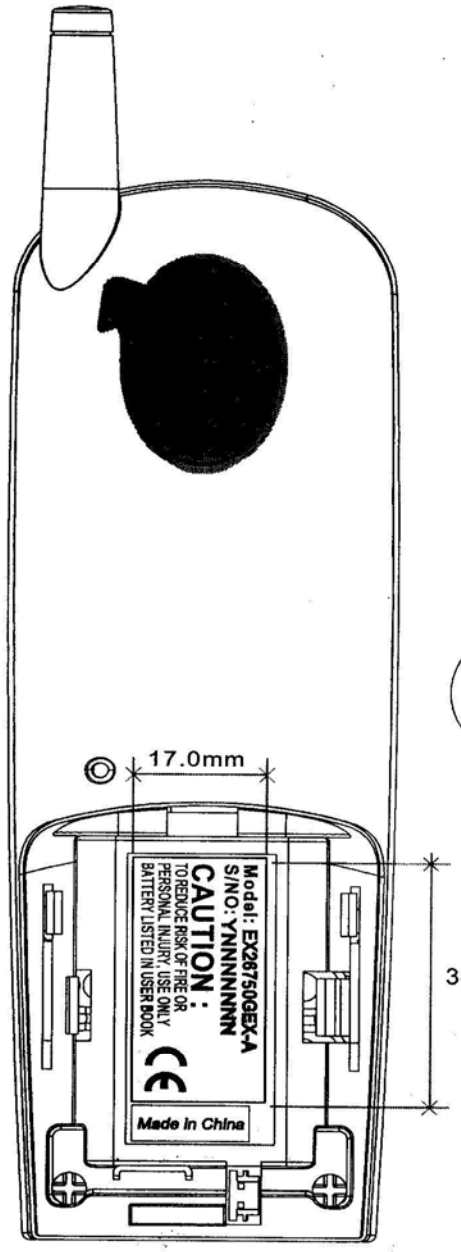
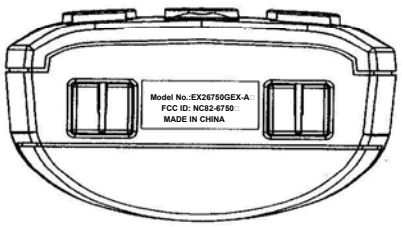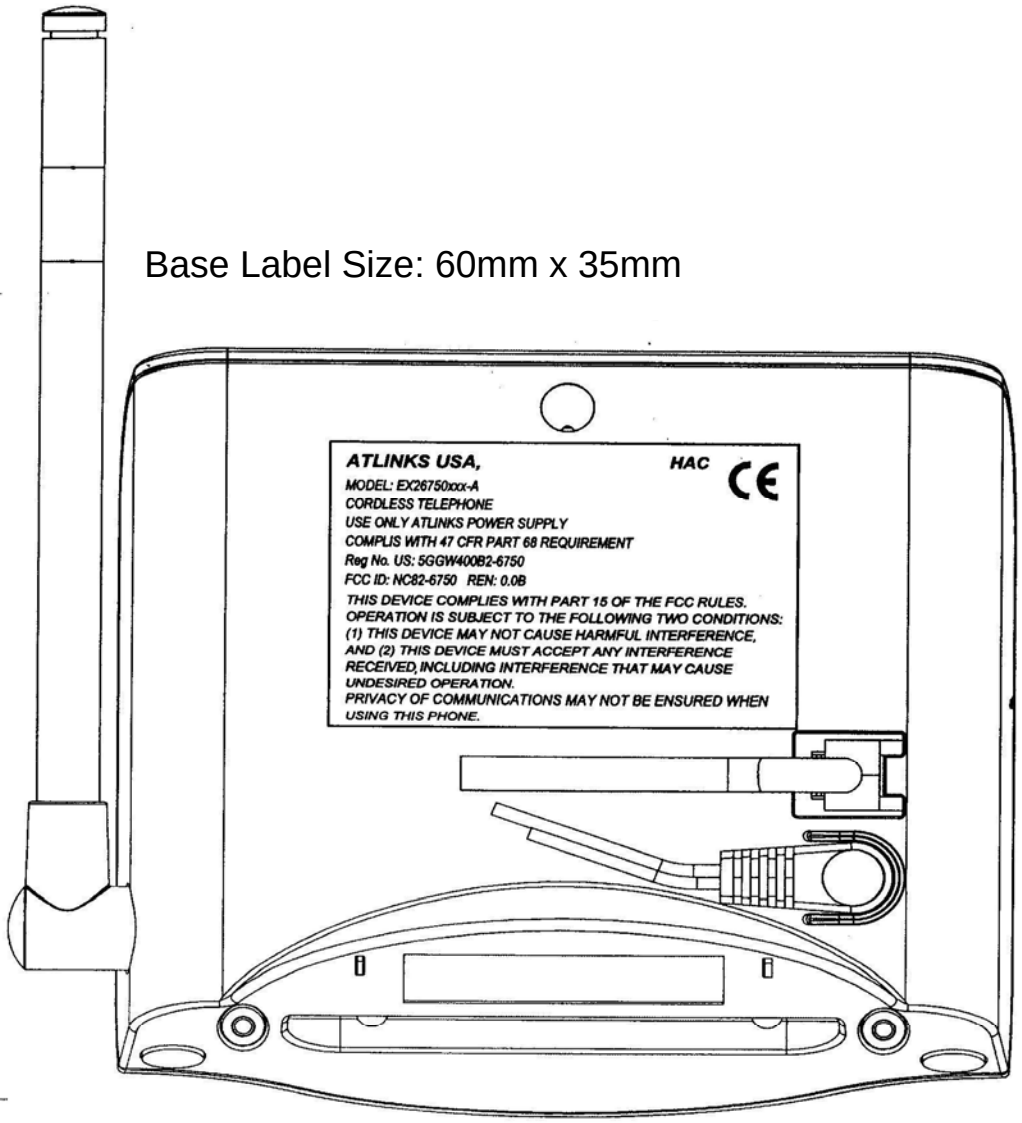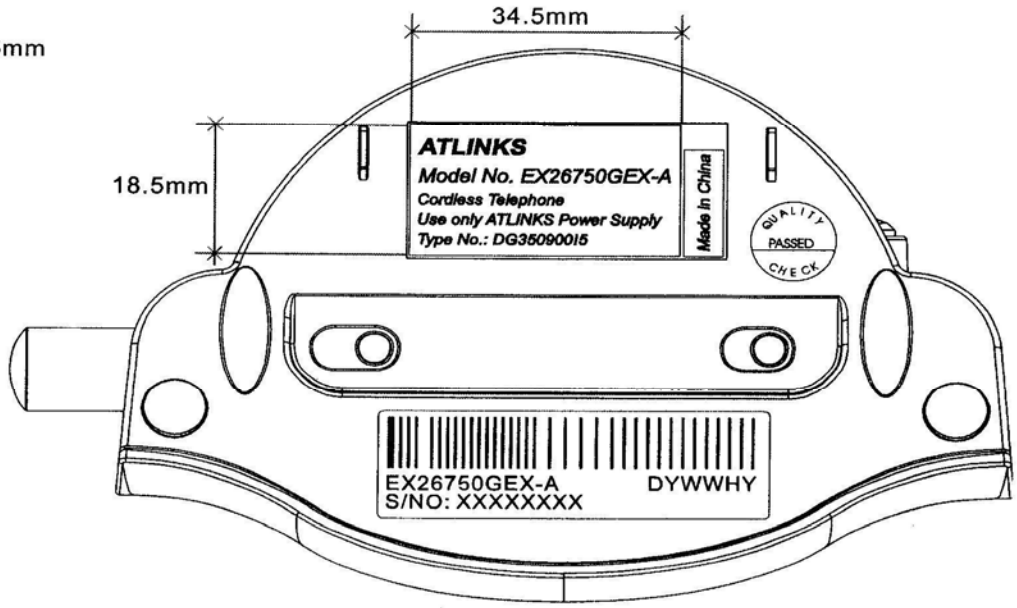
15mm x 7mm