FCC ID: NBQSVK433

PROPRIETARY INFO

REVISIONS				
LET	REV	DESCRIPTION	DATE	APPD
	X1	PRELIM RELEASE	4-NOV-98	

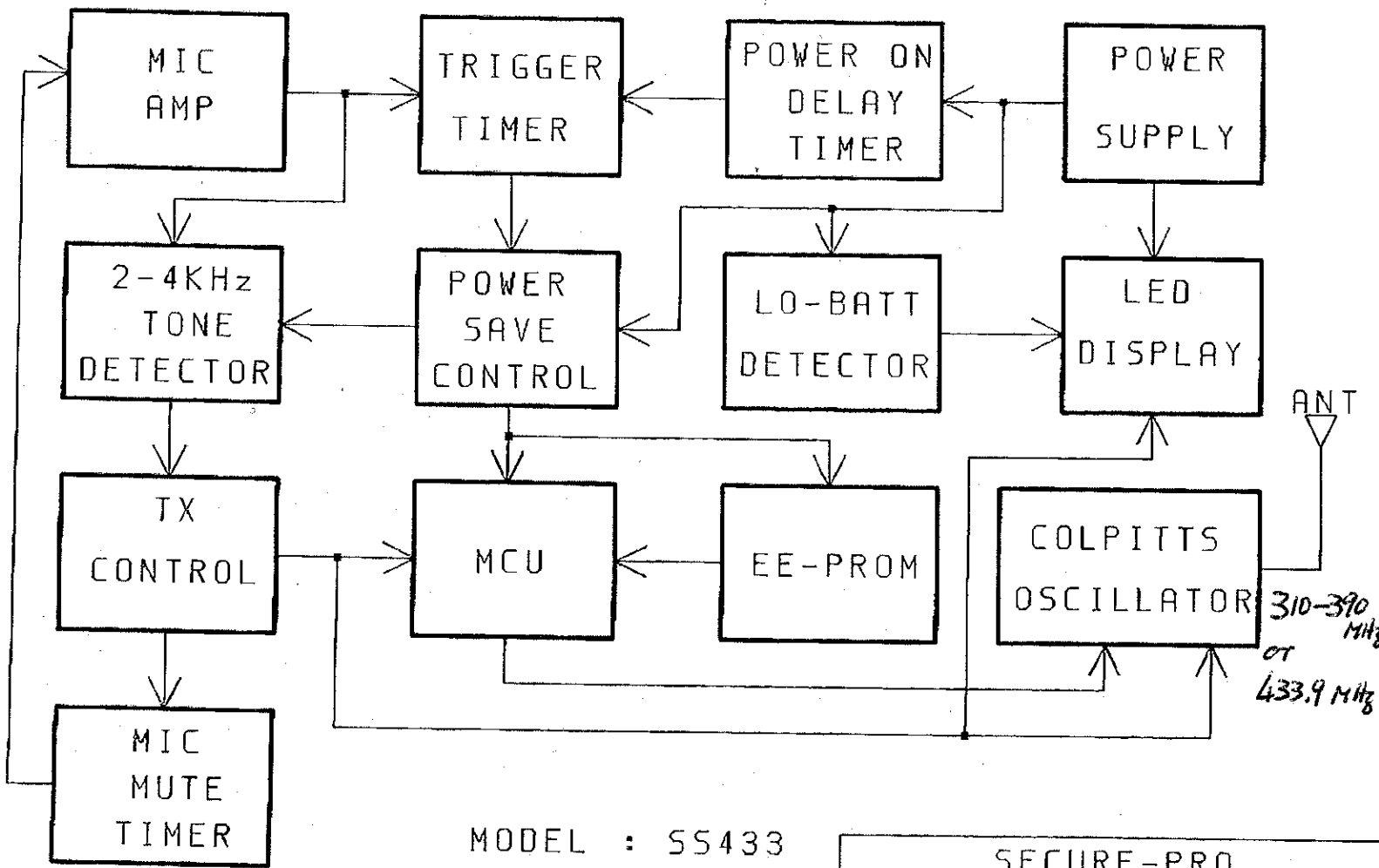

MODEL : SS433

SECURE-PRO		
Title	BLOCK DIAGRAM, SS433	
Size A	Document Number SS433BLK.SCH	REV X1
Date: January 8, 1999	Sheet 1 of 1	