REVISION RECORD			
VER	ECO/REASON	APPROVAL	DATE
0	Release For Production		

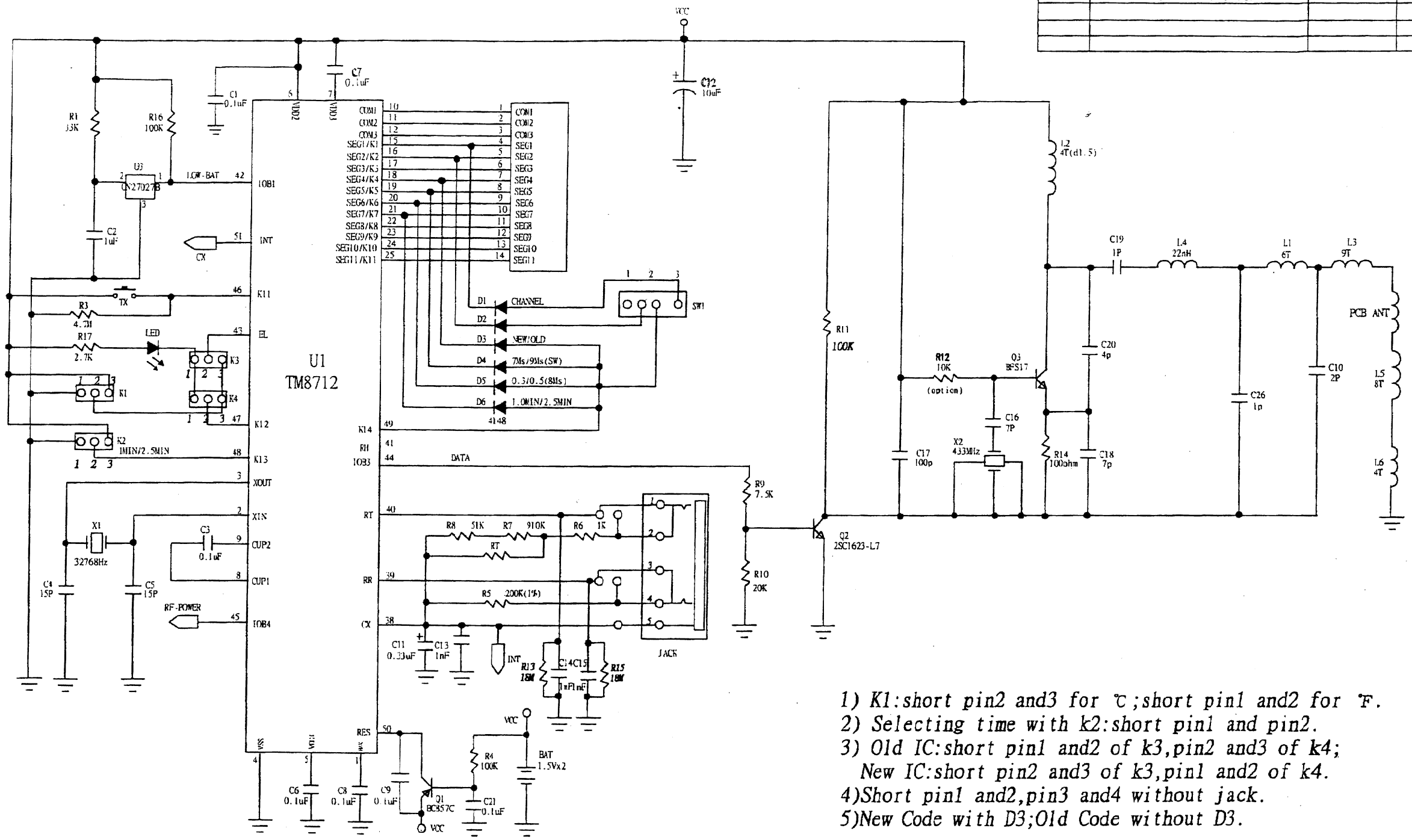

1) K1:short pin2 and3 for ℃;short pin1 and2 for ℉.
2) Selecting time with k2:short pin1 and pin2.
3) Old IC:short pin1 and2 of k3,pin2 and3 of k4;
New IC:short pin2 and3 of k3,pin1 and2 of k4.
4)Short pin1 and2,pin3 and4 without jack.
5)New Code with D3;Old Code without D3.

DESIGN:	DATED: Feb.01.05	Q&S Manufacturing Co.,Ltd.				
CHECKED:	DATED: 01-02-2005	MODEL NO.	217S54	PCB NO.		REV:0
APPROVAL:	DATED:	FILE NAME:	217S54sch	PAGE NO.	1 OF 1	

2005/2/2