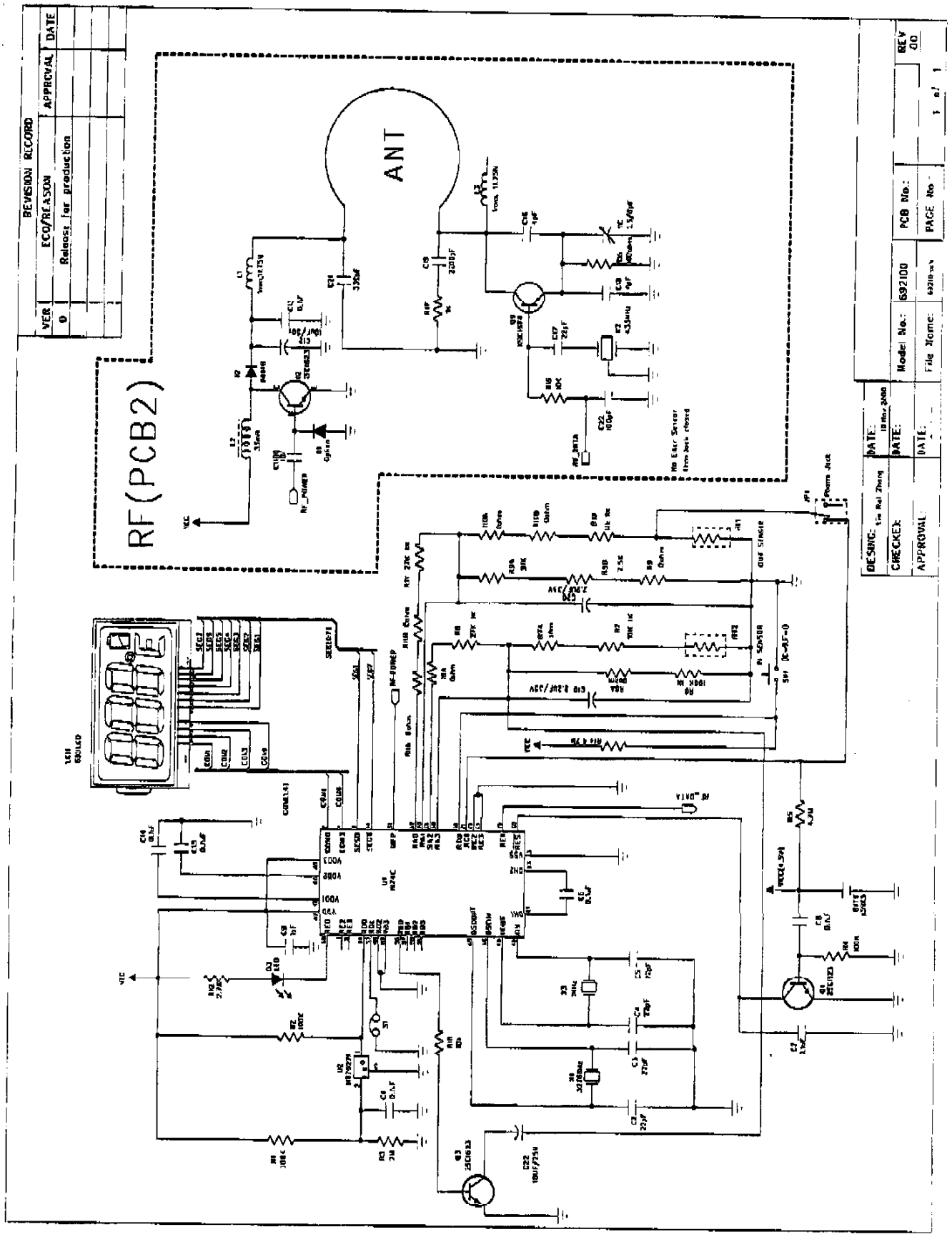
REVISION RECORD
VER
ECO/REASON
APPROVAL
DATE
0
Release for production
ANT
RF(PCB2)
DESIGNED:
CHECKED:
APPROVAL
DATE:
Model No.: 692100
PCB No.:
File Name:
PAGE No.
REV 00