REV.	ZONE	DESCRIPTION	DATE	APPROVED

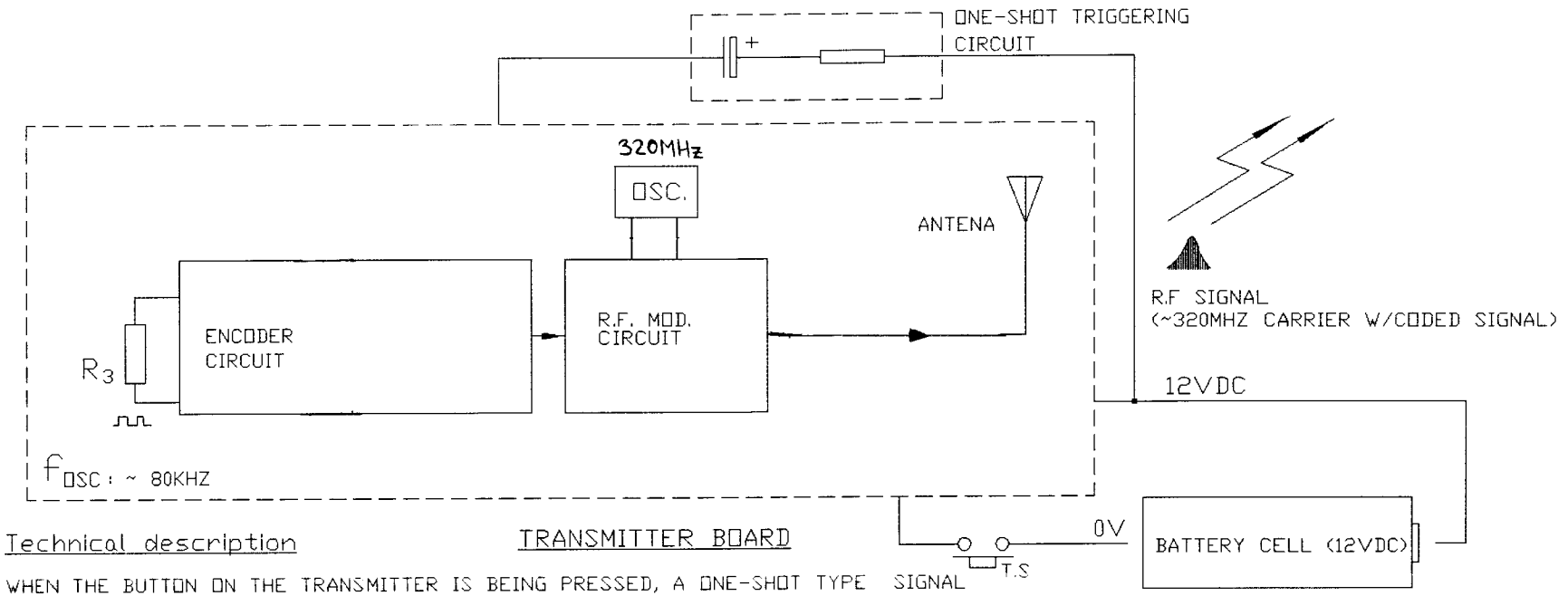

Technical description

TRANSMITTER BOARD

WHEN THE BUTTON ON THE TRANSMITTER IS BEING PRESSED, A ONE-SHOT TYPE (A SHORT PERIODS OF MODULATED SIGNAL) IS BEING TRANSMITTED.

THE CIRCUIT IS OPERATED AS FOLLOW :

1. - U1 : BUILT-IN FUNCTION WITH ENCODER, TIMING OSCILLATOR WITH AN EXTERNAL RESISTOR R3 (FREQ.: 80kHz)
2. - L1, L2, C2, C4, C5, C6, R1 , R2 & Q3 FUNCTION AS A SINGLE-ENDED L-C TUNED MODULATOR OPERATING AT 320MHz

ITEM	PART NUMBER	DESCRIPTION	QTY. REQ.	MATERIAL	REMARK

PARTS LIST

UNLESS OTHERWISE SPECIFIED DIMENSION ARE IN MM
TOLERANCE

DECIMALS	ANGULAR
.X ±	± '
.XX ±	

DO NOT SCALE DRAWING

RELEASED

TOOLING:
WORKING: DAYS
PRODUCTION:

TITLE

BLOCK DIAGRAM FOR 320MHZ TRANSMITTER

(TRANSMITTER FOR THE LANTERN WITH REMOTE CONTROL FUNCTION)

SCALE	MATERIAL	DRAWN BY	DATE	
1 : 1	–	C.K.C	AUG 9, 2005	
PART NUMBER	DRAWING NUMBER	APPROVED BY	NO. OF CAVITY	REV.
5317-702	XX-XXX		–	–