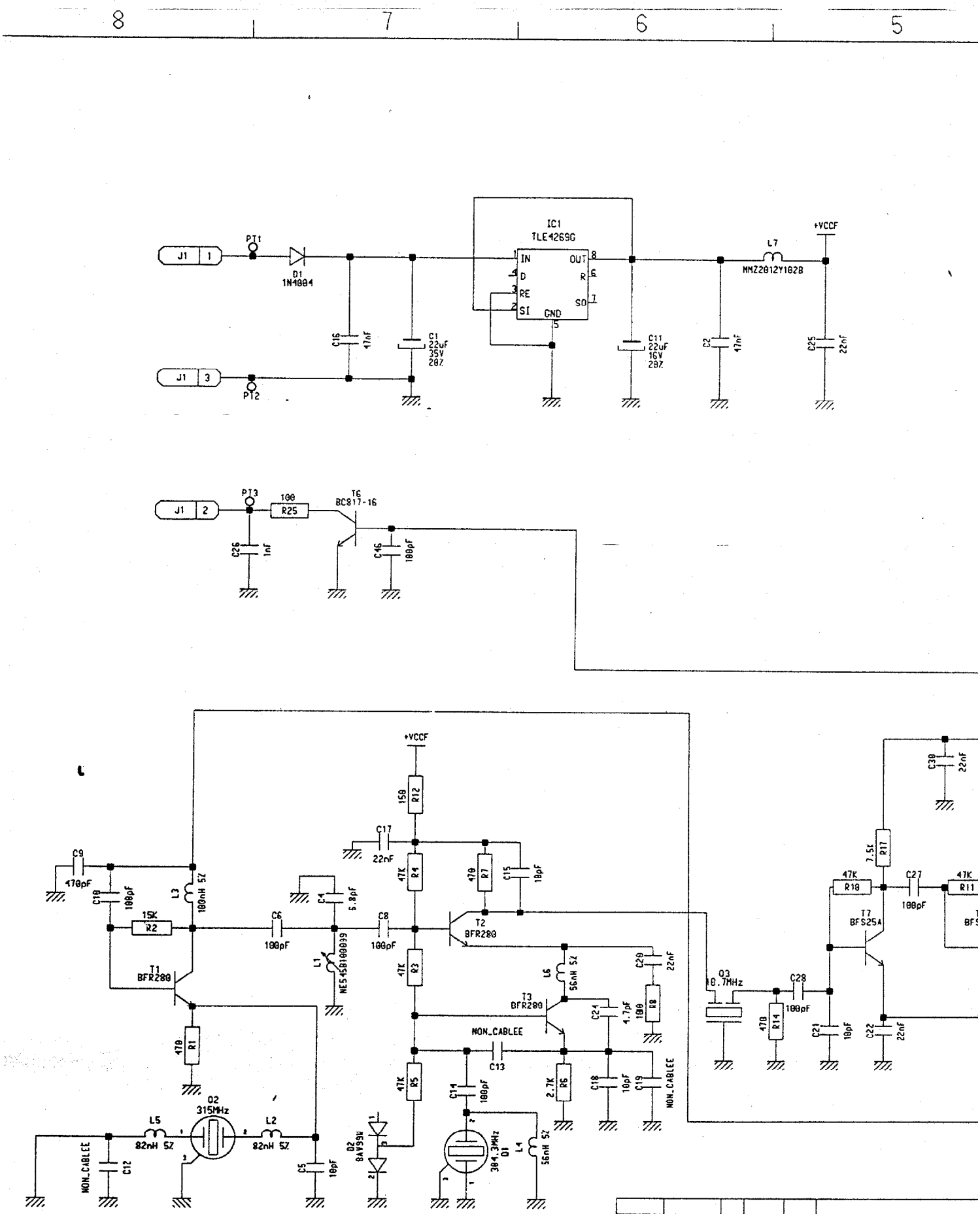
8
7
6
5
J1 1
PT1
D1
1N4004
C16
47nF
C1
22uF
35V
20%
J1 3
PT2
IC1
TLE4269G
IN
D
RE
SI
OUT
R
SO
GND
C11
22uF
16V
20%
L7
NMZ2012Y102B
+VCCF
C2
47nF
C25
22nF
J1 2
PT3
100
R25
T6
BC817-16
C26
1nF
C46
100pF
+VCCF
150
R12
C17
22nF
C9
470pF
C10
100pF
L3
100nH 5%
15K
R2
T1
BFR280
470
R1
C6
100pF
C4
5.6pF
L1
NES45B100039
C8
100pF
47K
R4
470
R7
C15
10pF
T2
BFR280
47K
R3
L6
56nH 5%
C20
22nF
T3
BFR280
C24
4.7pF
100
R9
NON_CABLEE
C13
47K
R5
C14
100pF
2.7K
R6
C18
10pF
C19
NON_CABLEE
Q2
315MHz
L5
82nH 5%
L2
82nH 5%
NON_CABLEE
C12
C5
10pF
D2
BAV99W
Q1
384.3MHz
L4
56nH 5%
Q3
10.7MHz
C28
100pF
470
R14
C21
10pF
C22
22nF
7.5K
R17
47K
R10
C27
100pF
T7
BFS25A
47K
R11
C30
22nF
MIRE
Mire face sup
4 poincons
B321032 03/02/98 FG SJ MODIFICATIONS SUIVANT DM W7
B321021 24/07/97 FG JR CREATION DU PLAN 09728929,