FCC ID: N4F-XH4

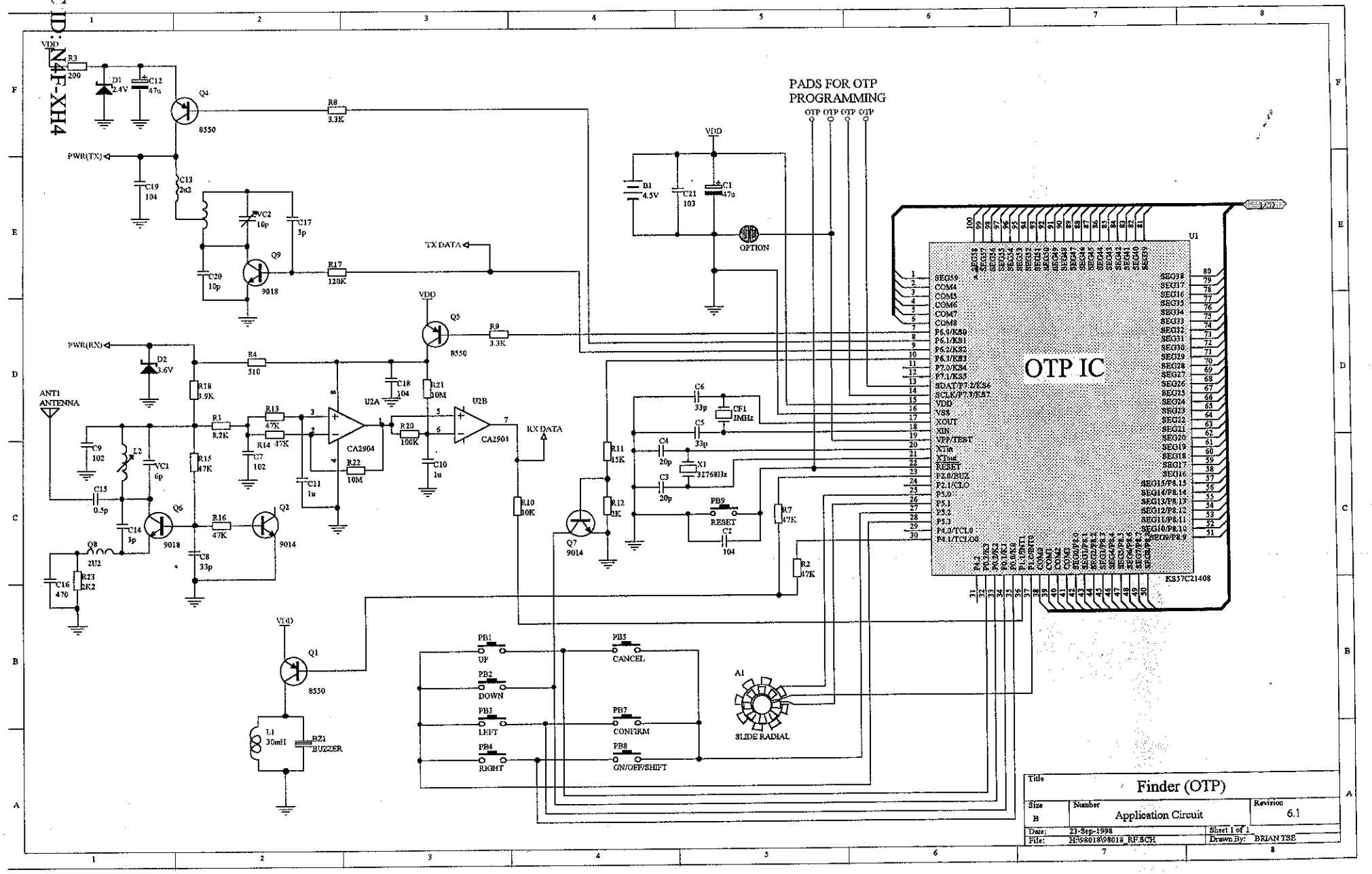

Title	Finder (OTP)	
Size B	Number Application Circuit	Revision 6.1
Date: 23-Sep-1998		Sheet 1 of 1
File: H:\98018\98018_RF.SCH		Drawn By: BRIAN TSE