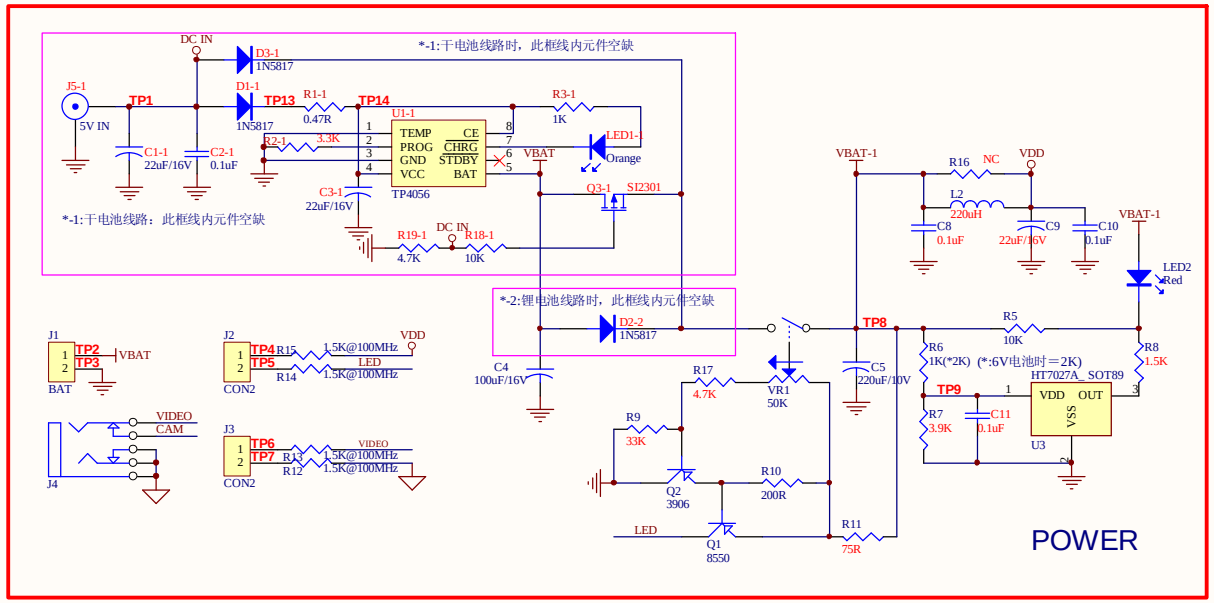

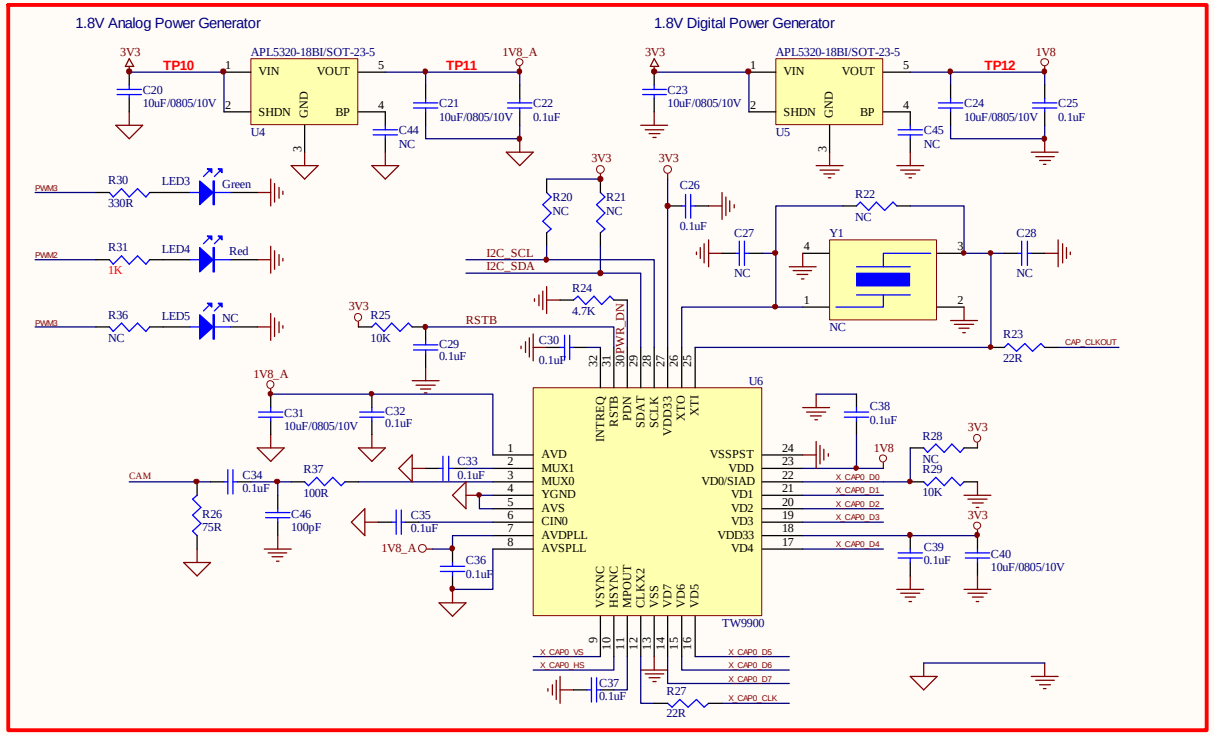

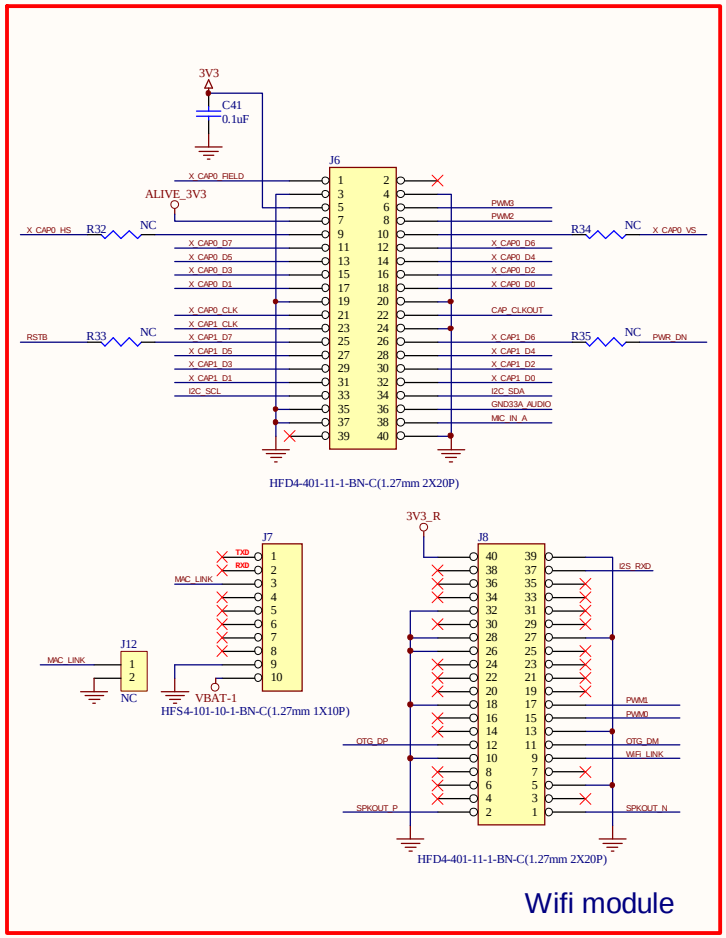

Test point	Description
TP1	DC 5V
TP2	BAT+
TP3	GND
TP4	VGA VDD
TP5	LED
TP6	VIDEO
TP7	VGA VDD
TP8	POWER IN
TP9	LOW VOLTAGE
TP10	3.3V
TP11	1.8V-A
TP12	1.8V-D
TP13	Charge Current-A
TP14	Charge Current-B

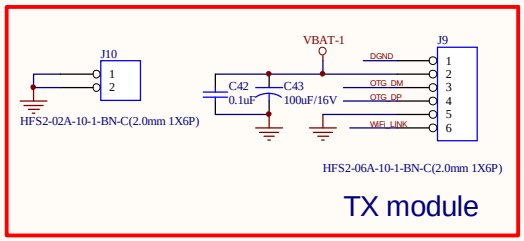

Title	TF-3003W	TEAMFORCE CO.,LTD
Size A3	Number	Revision V1.0
Date: 26-Apr-2012		Sheet of
File: E:\EN File\内视镜\TF-3003W\SCH\03\TF-3003W.SCH.DDB		Drawn By: Kevin

(2) Circuit Diagram

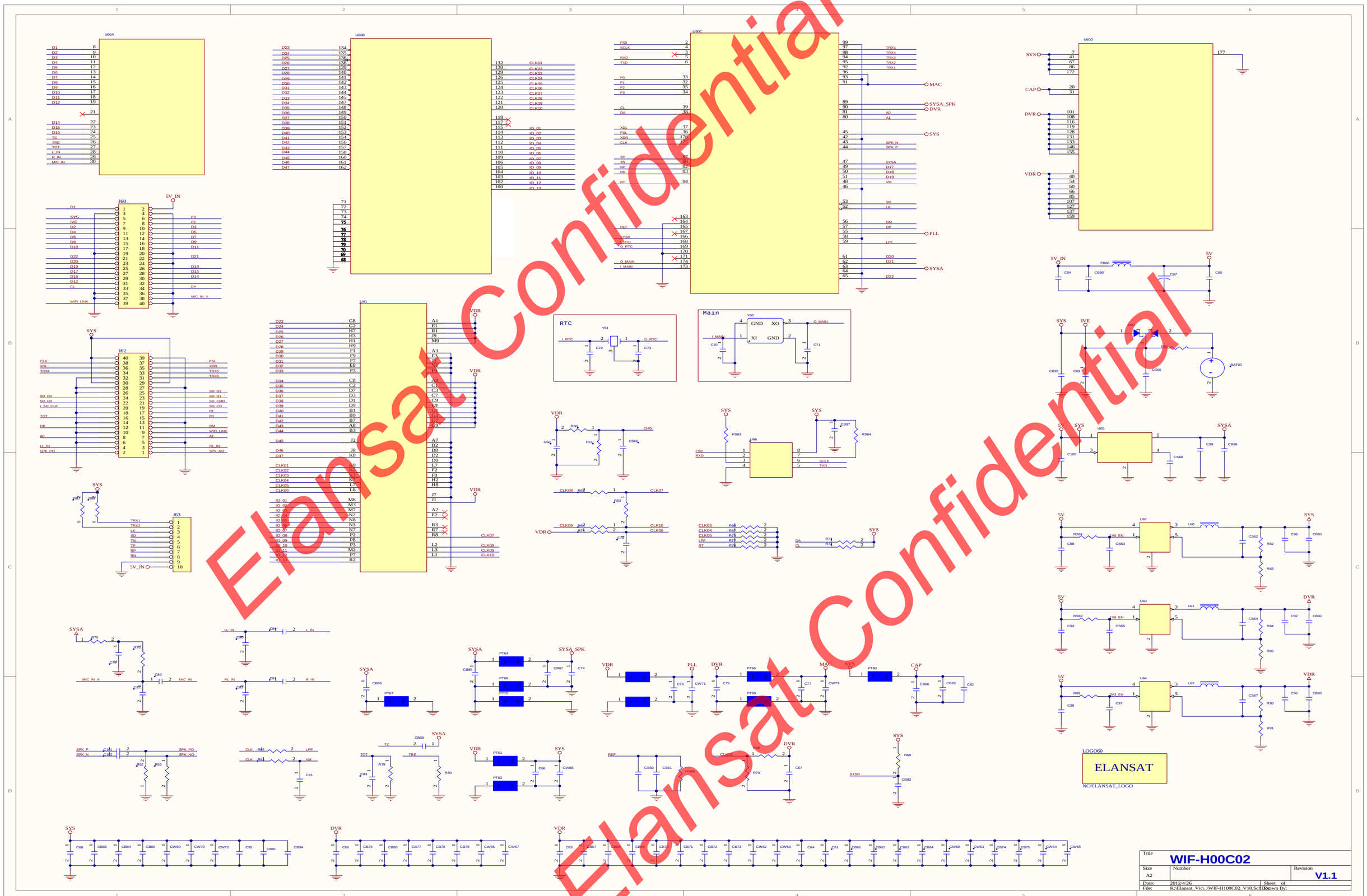

Elansat Confidential
Elansat Confidential

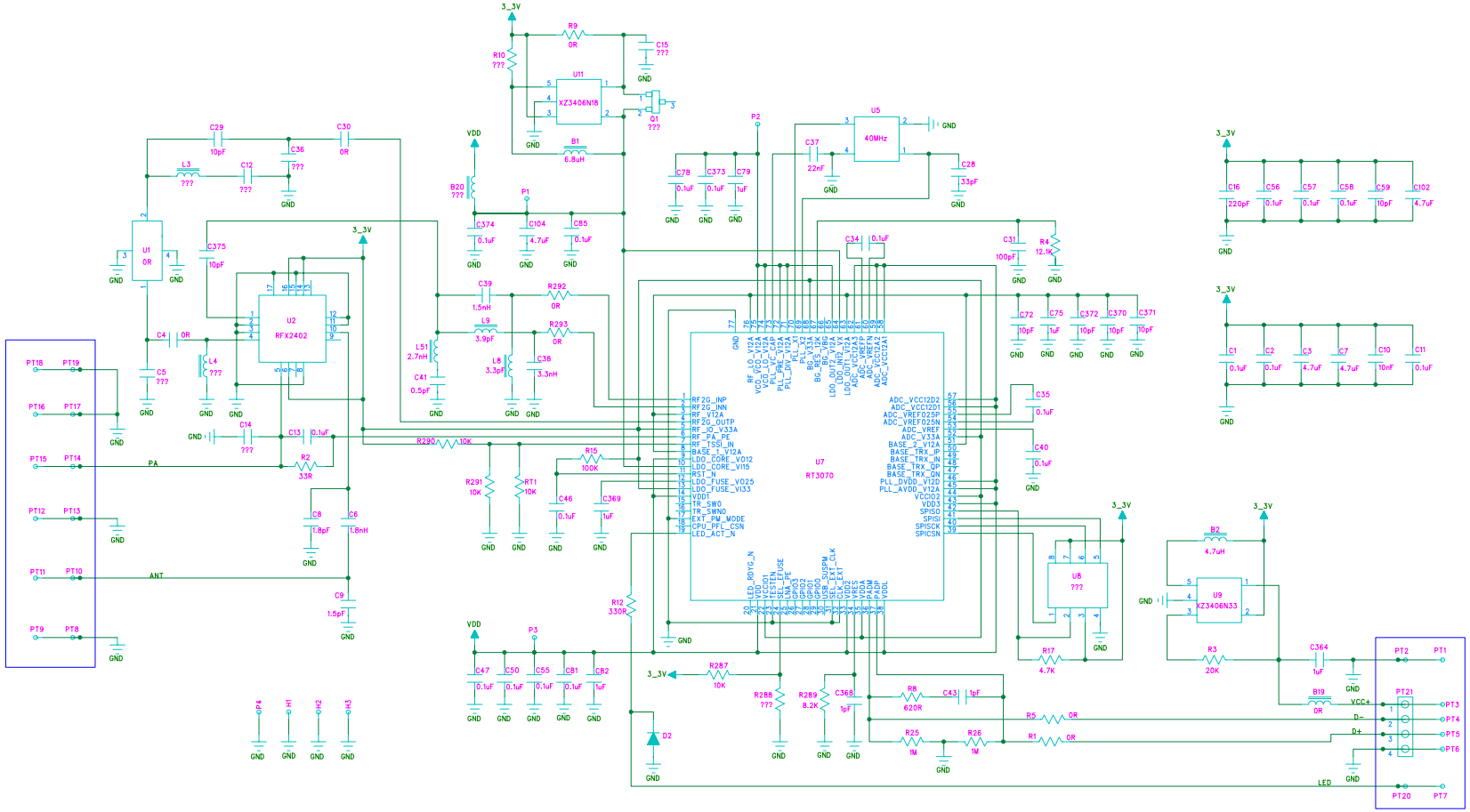
U7
RT3070
U2
RFX2402
U11
XZ3406N18
U5
40MHz
U8
???
U9
XZ3406N33
U1
0R
PT21
PT20
PT18
PT19
PT16
PT17
PT15
PT14
PT12
PT13
PT11
PT10
PT9
PT8
PT2
PT1
PT3
PT4
PT5
PT6
PT7
3_3V
VDD
GND
PA
ANT
VCC+
D-
D+
LED