ERS1380NB Schematics

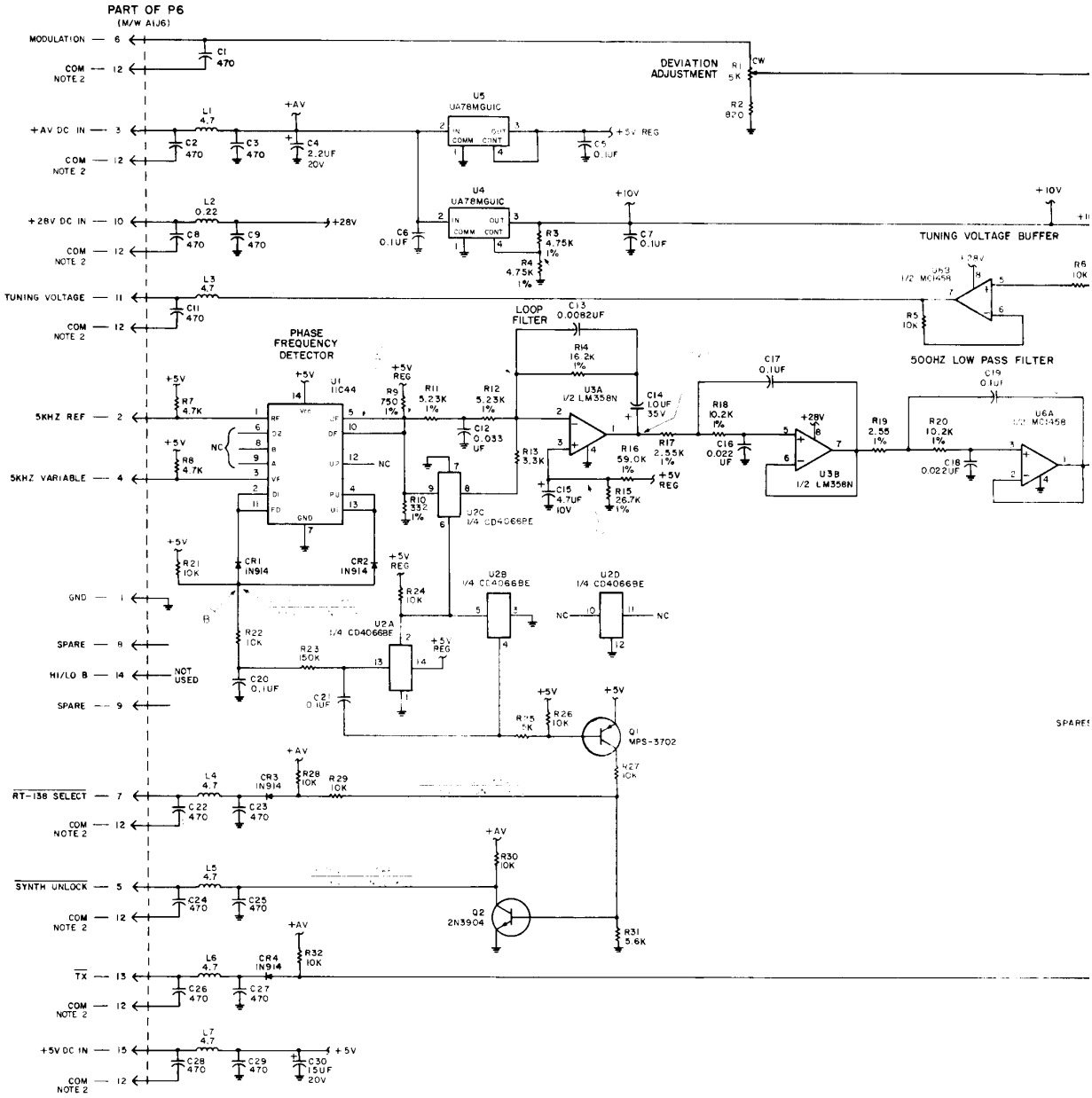

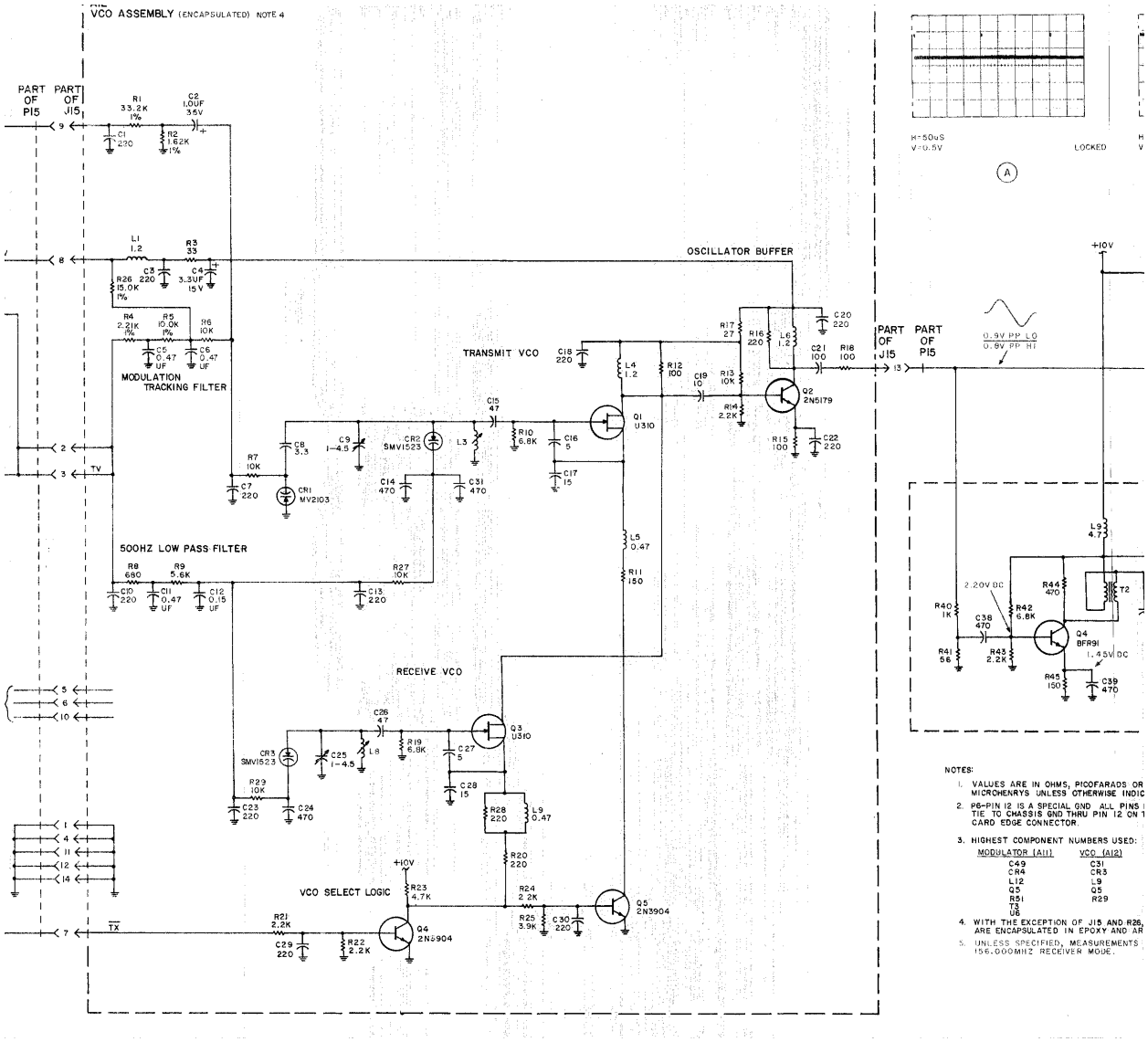
VCO ASSEMBLY (ENCAPSULATED) NOTE 4
PART OF P15
PART OF J15
OSCILLATOR BUFFER
TRANSMIT VCO
MODULATION TRACKING FILTER
500HZ LOW PASS FILTER
RECEIVE VCO
VCO SELECT LOGIC
PART OF J15
PART OF P15
0.9V PP LO
0.8V PP HI
+10V
2.20V DC
1.45V DC
H=50uS
V=0.5V
LOCKED
NOTES:
1. VALUES ARE IN OHMS, PICOFARADS OR MICROHENRYS UNLESS OTHERWISE INDIC
2. P6-PIN 12 IS A SPECIAL GND. ALL PINS TIE TO CHASSIS GND THRU PIN 12 ON CARD EDGE CONNECTOR.
3. HIGHEST COMPONENT NUMBERS USED:
MODULATOR (A11) VCO (A12)
C49 C31
CR4 CR3
L12 L9
Q5 Q5
R51 R29
T3
U6
4. WITH THE EXCEPTION OF J15 AND R26, ARE ENCAPSULATED IN EPOXY AND AR
5. UNLESS SPECIFIED, MEASUREMENTS 156.000MHZ RECEIVER MODE.

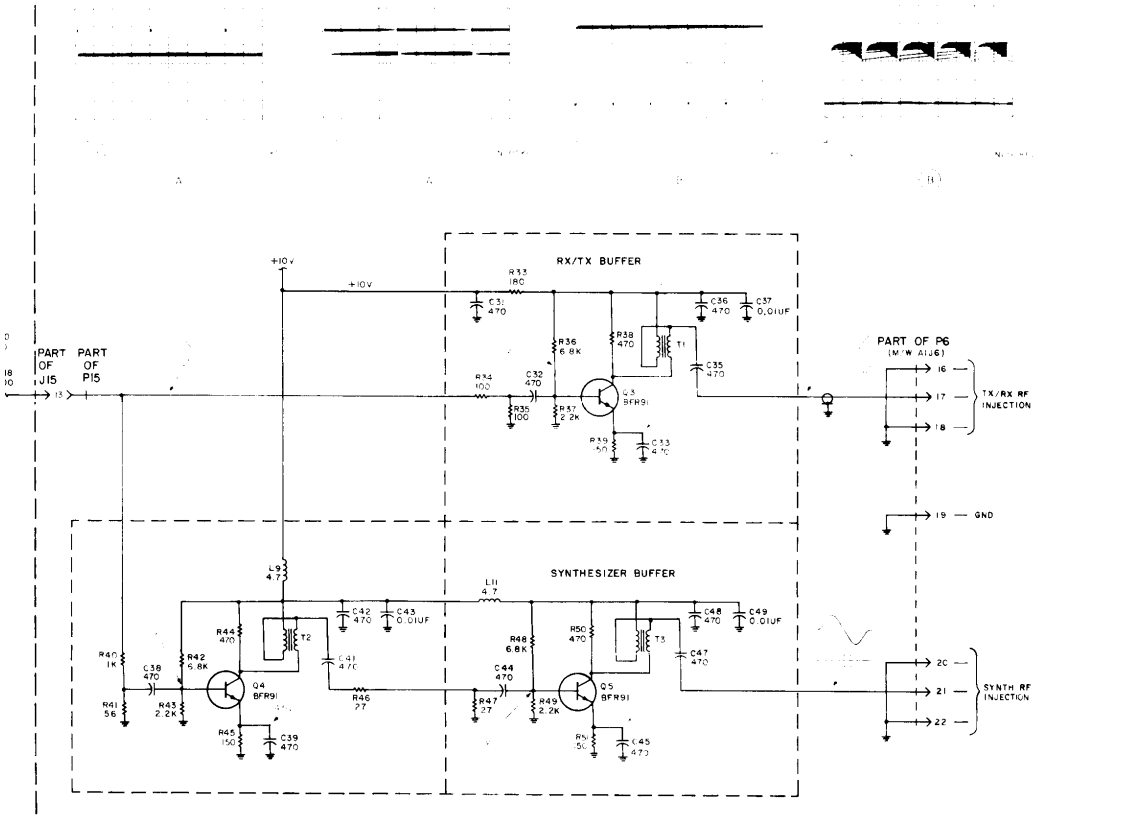

NOTES:

1. VALUES ARE IN OHMS, PICOFARADS OR MICROHENRYS UNLESS OTHERWISE INDICATED.
2. P6-PIN 12 IS A SPECIAL GND. ALL PINS LABELED "COM" TIE TO CHASSIS GND THRU PIN 12 ON THE PC BOARD CARD EDGE CONNECTOR.
3. HIGHEST COMPONENT NUMBERS USED:

MODULATOR (A11)	VCO (A12)
C49	C31
CR4	CR3
L12	L9
Q5	Q5
R51	R29
T3	
U6	

4. WITH THE EXCEPTION OF J15 AND R26, THE VCO COMPONENTS ARE ENCAPSULATED IN EPOXY AND ARE NOT REPLACEABLE.

PART NUMBER	DESCRIPTION	ITEM