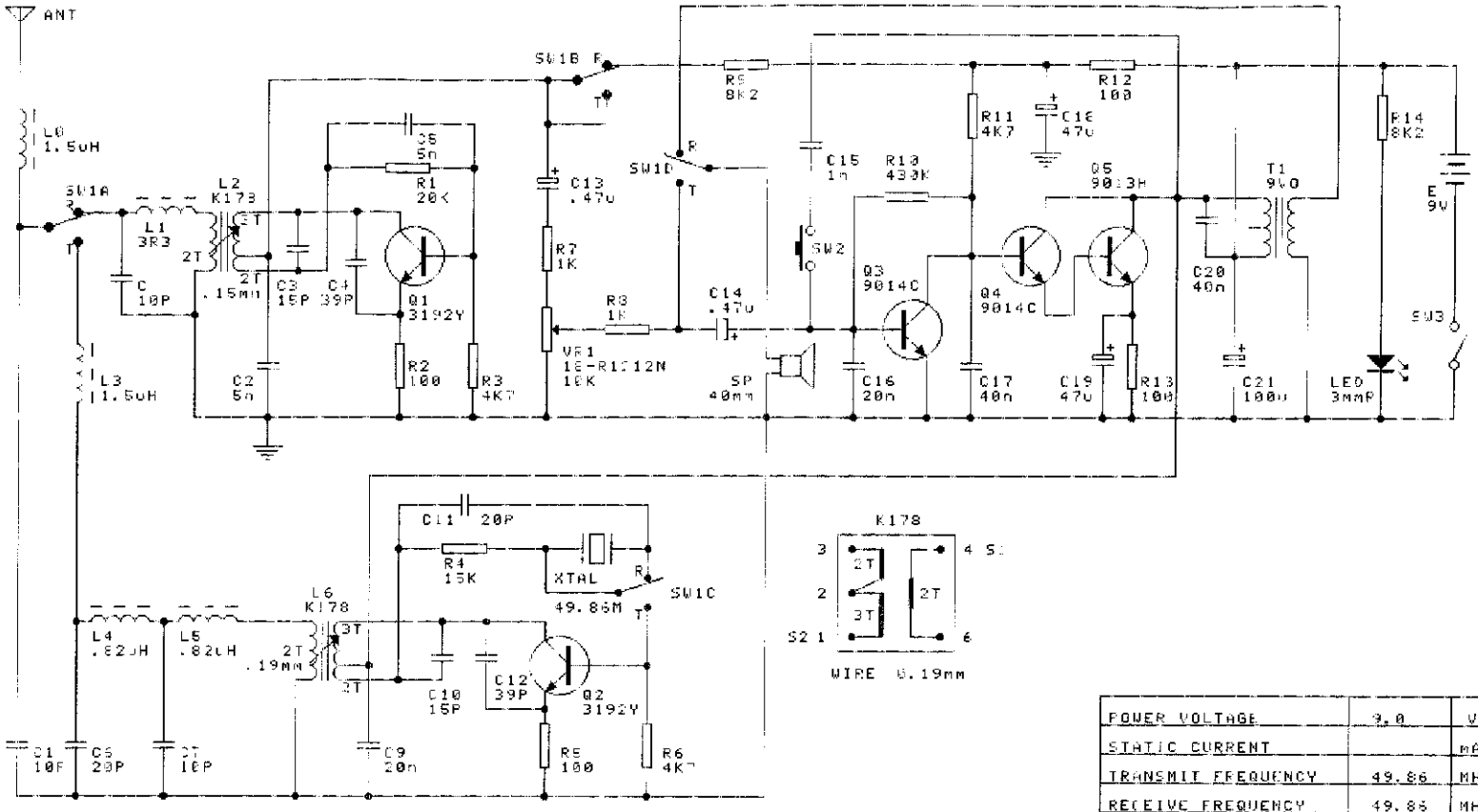

100	R2	R5	430K	R10	15P	C3	C10	3mmR	LED	.82uH	L4	L5
100	R12	R13	10K	VR1	20P	C6	C11	3192Y	Q1	Q2	K178	L2	L6
1K	R7	R8	.47u	C13	C14	39P	C4	C12	9014C	Q3	Q4	9V0	T1
4.7K	R3	R6	R11	47u	C18	C19	1n	C15	9013H	Q5	15-21	SP
8.2K	R9	R14	100u	C21	5n	C2	C5	49.86M	XTAL	25-97	1PCS
15K	R4	10P	C1	C7	20n	C9	C16	1.5uH	L0	L3	19-60	SW1
20K	R1		C		40n	C17	C20	3.3uH	L1	19-56	SW3

POWER VOLTAGE	3.0	V
STATIC CURRENT		mA
TRANSMIT FREQUENCY	49.86	MHZ
RECEIVE FREQUENCY	49.86	MHZ
MAXIMUM OUTPUT POWER		mW
SENSITIVITY		dbM
DISTANCE (OPEN AREA)		m

TITEL:	WT9140B
P.C.B.	BP-347
DRAWN BY:	HO
DATE:	2001-06-14

18 JUN 2001