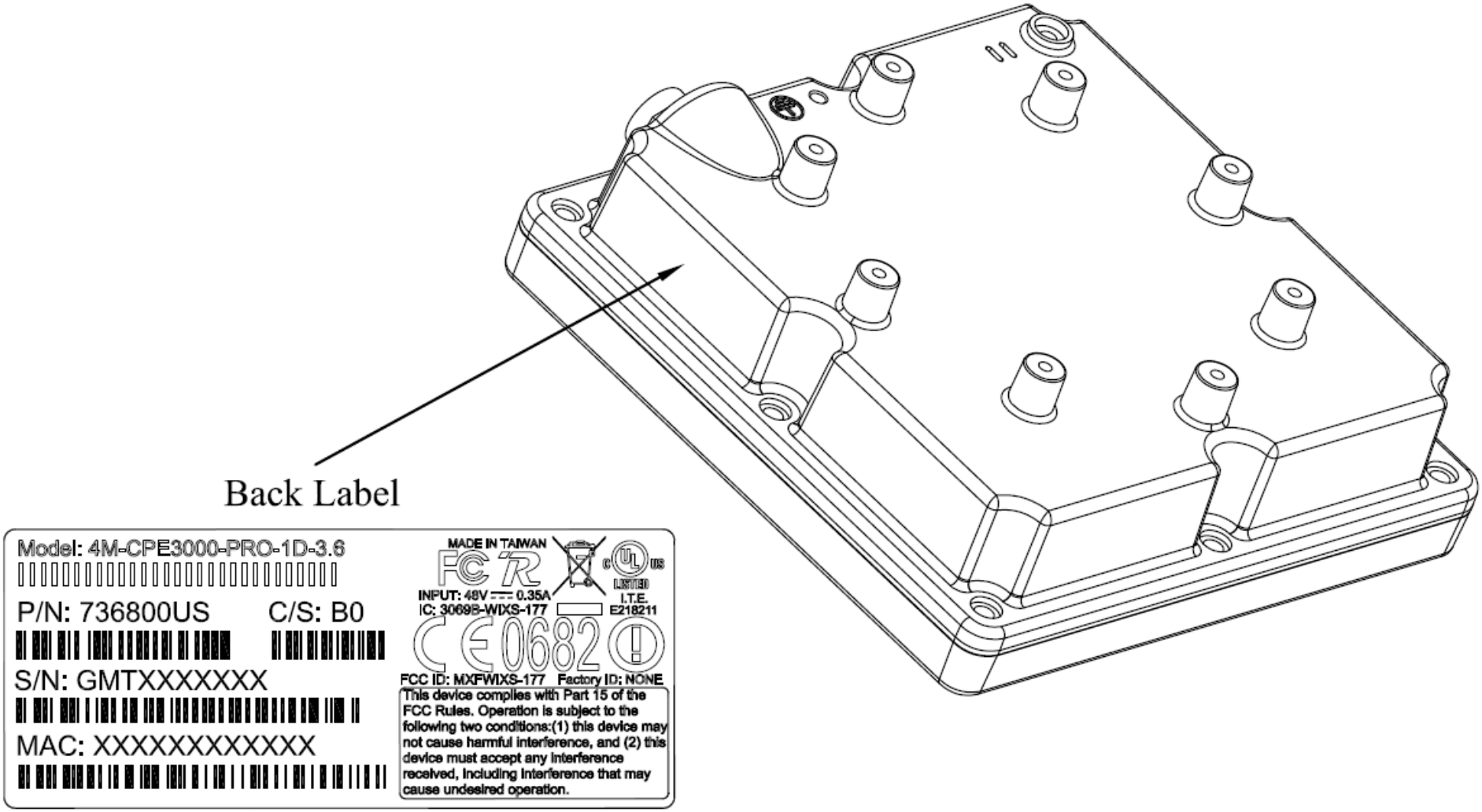WIXS-177 Product Label